BOHN

BN-HCU | **MARCH 2025**
Replaces February 2023

3-22 HP AIR-COOLED CONDENSING UNITS

Technical Guide

Now including DOE compliant models

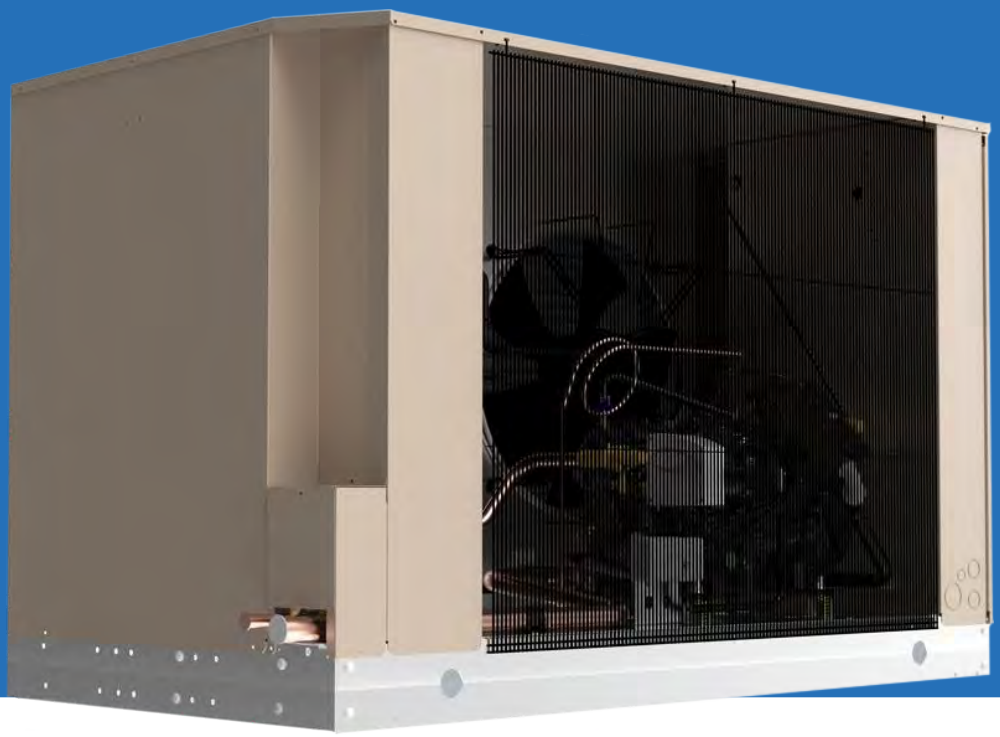

TABLE OF CONTENTS

3 Features & Benefits
4 Nomenclature
4 Preferred Option Packages/ Standard Features
5 Electrical & Mechanical Options
6 A2L Performance Data for Scroll Compressors
A2L Medium Temperature Scroll Compressors
6-8 Medium Temperature Scroll Compressor Models (R-454A, R-454C, R-455A)
A1 Medium Temperature Scroll Compressors
9-12 Medium Temperature Scroll Compressor Models (R-404A/R-507A, R-448A/R-449A, R-407A/R-407F, R-407C)
A2L Low Temperature Scroll Compressors
13-15 Low Temperature Scroll Compressor Models (R-404A/R-507A, R-448A/R-449A, R-407A/R-407F, R-407C)
A1 Low Temperature Scroll Compressors
16-19 Low Temperature Scroll Compressor Models (R-404A/R-507A, R-448A/R-449A, R-407A/R-407F, R-407C)
20 A2L & A1 Unit Specifications for Scroll Compressors
20-21 Medium and Low Temperature Models
A2L & A1 Electrical Data for Scroll Compressors
22-25 Medium and Low Temperature Models
26 A2L & A1 AWEF Data for Scoll Compressors
26-27 Medium and Low Temperatures and Indoor/Outdoor
A2L Medium Temperature Discus™ Compressors
28-33 Medium Temperature Scroll Compressor Models
A1 Medium Temperature Discus™ Compressors
34-41 Medium Temperature Discus™ Compressor Models (R-404A/R-507A, R-448A/R-449A, R-407A/R-407F, R-407C)
A2L Low Temperature Discus™ Compressors
42-47 (R-404A/R-507A, R-448A/R-449A, R-407A/R-407F, R-407C)
A1 Low Temperature Discus™ Compressors
48-55 Low Temperature Discus™ Compressor Models
56 A2L & A1 Unit Specifications for Discus™ Compressors
56-57 Medium and Low Temperature Models
A2L and A1 Electrical Data for Discus™ Compressors
58-60 Medium Temperature Discus™ Compressor Model
61 A2L & A1 AWEF Data for Discus™ Compressors
61-64 Medium and Low Temperatures and Indoor/Outdoor
65 A2L Performance Data for Semi-Hermetic Compressors
A2L Medium Temperature Semi-Hermetic Compressors
65-66 Medium Temperature Semi-Hermetic Compressor Models (R-454C, R-455A)
A1 Medium Temperature Semi-Hermetic Compressors
67-70 Medium Temperature Semi-Hermetic Compressor Models (R-404A/R-507A, R-448A/R-449A, R-407A/R-407F, R-407C)
A2L Low Temperature Semi-Hermetic Compressors
71-74 Low Temperature Semi-Hermetic Compressor Models (R-454C, R-455A)
A1 Low Temperature Semi-Hermetic Compressors
75-82 Low Temperature Semi-Hermetic Compressor Models (R-404A/R-507A, R-448A/R-449A, R-407A/R-407F, R-407C)
83 A2L & A1 Unit Specifications for Semi-Hermetic Compressors
83-84 Medium and Low Temperature Semi-Hermetic Models
A2L & A1 Electrical Data for Semi-Hermetic Compressors
85-86 Medium Temperature Semi-Hermetic Models
87 A2L & A1 AWEF Data for Semi-Hermetic Compressors
87-89 Medium Temperature Compressor Models
90 Replacement Parts
91 Dimensional Drawings

FEATURES & BENEFITS

BETTER PERFORMANCE

- Enhanced grill design gives 25% to 40% increase in free-air area
- Electrical box located out of air stream
- Vertical receiver needs less refrigerant for liquid seal

FASTER ACCESS

- Base valve and high & low pressure taps on outside of unit
- Removable grill for access to all serviceable parts
- Improved access to fan motors & components
- Lighter, one-piece top
- Easy-to-view sight glass location

EASIER SERVICE

- Better access to components for easier repair
- Compact design allows for better jobsite placement & installation
- Dual isolation valves on receiver

GREATER RELIABILITY

- Floating Tube™ coil design eliminates tube-sheet leaks
- Pre-bent tubing reduces mechanical joints
- State-of-the-art factory leak-detection ensures highest quality

A2L FEATURES AND OPTIONS

- Compressors are compatible with both A2L and A1 refrigerants
- Base valve cover to protect valves
- Red tags on base valves and connection points as indicators for A2L refrigerants
- A2L labels to meet regulatory requirement

OUTSTANDING FEATURES

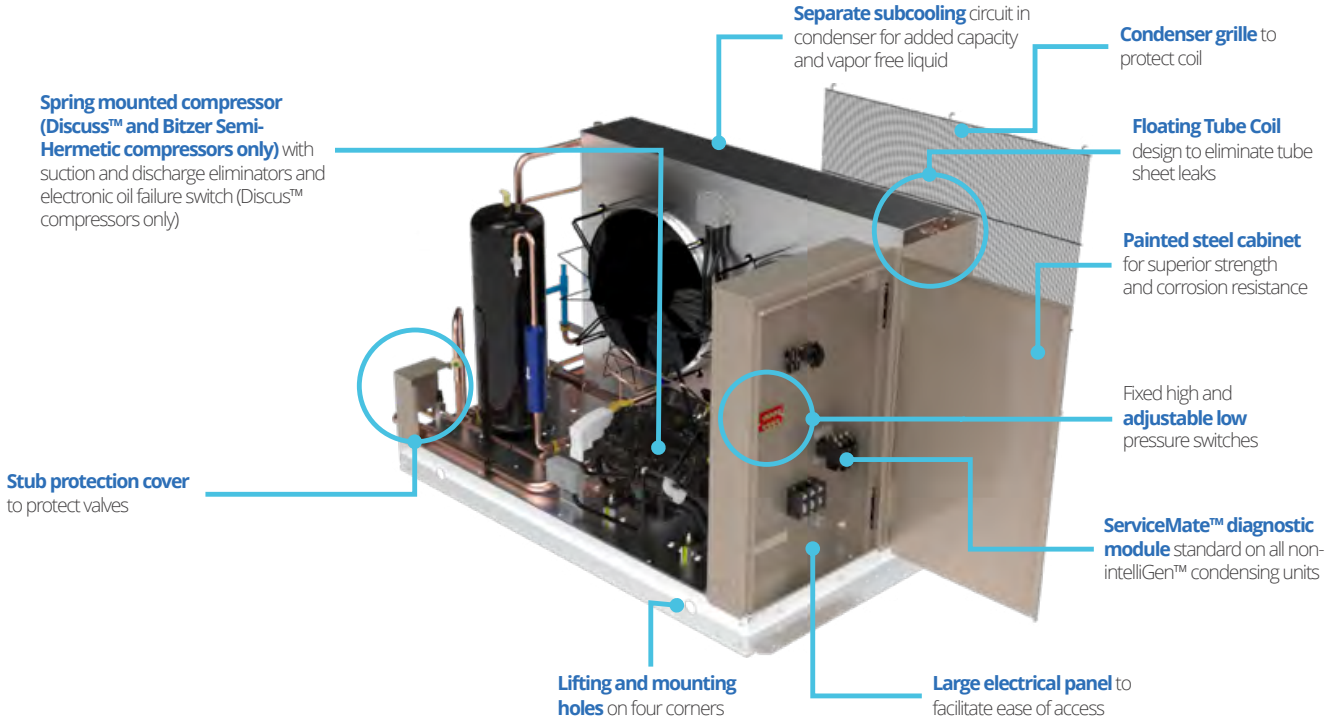

NOMENCLATURE

BRAND
B = Bohn

CONDENSING UNIT STYLE
H = Outdoor Horizontal
N = Indoor Horizontal

TEMP RANGE
M = Medium Temperature
L = Low Temperature

REVISION

COMPRESSOR STYLE
D = A1 Discus™
Z = A1 Scroll
X = A1 Bitzer Semi-Hermetic
E = A2L / A1 Discus™
Y = A2L / A1 Scroll
V = A2L / A1 Bitzer Semi Hermetic

B C H 0030 L C A C D A####

PRODUCT IDENTIFIER
C = Condensing Unit

HP

0030 = 3 hp	**0080** = 8 hp
0040 = 4 hp	**0086** = 8.5 hp
0041 = 4 hp	**0090** = 9 hp
0050 = 5 hp	**0091** = 9 hp
0051 = 5 hp	**0100** = 10 hp
0056 = 5.5 hp	**0101** = 10 hp
0060 = 6 hp	**0120** = 12 hp
0061 = 6 hp	**0121** = 12 hp
0062 = 6 hp	**0130** = 13 hp
0065 = 6.5 hp	**0131** = 13 hp
0070 = 7 hp	**0141** = 14 hp
0075 = 7.5 hp	**0150** = 15 hp
0076 = 7.5 hp	**0220** = 22 hp

VOLTAGE
C = 208-230/3/60
D = 460/3/60
E = 575/3/60

COMPRESSOR MANUFACTURER
C = Copeland
B = Bitzer

FACTORY INSTALLED OPTION PACKAGES
A#### = Preferred Option Packages
C#### = A la Carte Options
X#### = Custom Option Packages

FACTORY INSTALLED: PREFERRED OPTION PACKAGES

Please see Price Book or The HUB for availability

Option Code	Description (All Preferred Options include Standard Base +)
A0100	Defrost Timer – Air
A0300	Defrost Timer - Contactor
A0302	Defrost Timer - Contactor Low Amps
A0303	Defrost Timer - Contactor High Amps
A0400	intelliGen™
A1002	Replaceable Core Filter-Accumulator + Liquid Standard + Replaceable Core Filter Drier

STANDARD FEATURES

- ServiceMate™ Diagnostic Module
- Manual Pump Down Switch
- Electronic Oil Failure Switch (Discus™ Compressors Only)
- Fixed Head Pressure Control Valve (C4 & C5 cabinets only)
  - Low temp - Revision A 100 psi
  - Med. temp - Revision A 145 psi
  - Low temp - Revision B 145 psi
- Adjustable Head Pressure Control Valve (C6 cabinet only)
- Spring Mounted Compressors with Suction and Discharge Vibration Eliminators (Discus™ and Bitzer Compressors only)
- Crank Case Heater
- Adjustable Low Pressure Control
- Fixed High Pressure Control
- Liquid Line Sight Glass
- Permanent Liquid Line Filter
- Outdoor Painted Cabinet
- Floating Tube™ Design

ELECTRICAL OPTIONS

Smart Defrost Kit™ (SDK)
Crankcase Heater on Indoor Units
Fan cycling
Defrost Timer for Air Defrost
Defrost Timer and Contactor for Electric Defrost (C6 cabinet includes evaporator sub fusing as standard in kit)
intelliGen™ Kits (see intelliGen™ section for details)
Electric Defrost Fusing (includes evaporator fan fusing on C4 and C5 cabinets)
Dual-Pressure Control*
Adjustable High Pressure Control with Manual Reset*
Phase-Loss Monitor*
Compressor Fusing*
Circuit Breaker Circuit Protection for Compressor, Condenser Fan and Control Circuit*

MECHANICAL OPTIONS

Adjustable Head Pressure Valve
Head Pressure Valve on Indoor Units
Mounted Liquid Line Solenoid Valve
Replaceable Core Liquid Line Filter/Drier
Permanent Suction Line Filter
Replaceable Core Suction Line Filter
Suction Accumulator
Oil Separator
Bohnguard™ Fin Protection
Copper Finned Coil
Oversized Receiver
Slanted Louver for Snowbelt Regions (not available with indoor unit)
12" Extended Legs for Snowbelt Regions
Hail Guards
Standard receiver with low ambient kit (heated/insulated receiver & low pressure bypass time delay relay)
NEMA contactors*
Compressor Unloading (one step)*

* Available on C6 cabinet only

A2L PERFORMANCE DATA – R-454A

Medium Temperature Models - Scroll Compressors

Please consult AWEF table on page 26 to confirm DOE compliance per model

R-454A		Capacity BTUH @ 90°F Ambient by SST									
Model	Compressor	+40°F	+35°F	+30°F	+25°F	+20°F	+15°F	+10°F	+5°F	+0°F	-10°F
BCH0065M^ACY	YB44KAE	78,510	72,270	66,190	60,480	55,050	49,960	45,180	40,760	36,620	29,290
BCH0070M^ACY	YB51KAE	96,390	88,290	80,530	73,210	66,340	59,970	54,040	48,570	43,510	34,520
BCH0075M^ACY	YB56KAE	107,450	98,260	89,650	81,540	73,970	66,920	60,310	54,230	48,660	38,760
BCH0086M^ACY	YB68KAE	125,310	115,070	105,040	95,690	86,890	78,690	71,060	63,950	57,410	45,950
BCH0100M^ACY	YB83KAE	146,440	135,360	124,180	113,700	103,740	94,340	85,550	77,350	69,710	56,060
BCH0141M^ACY	YB100KAE	185,010	169,910	155,500	141,910	128,970	116,890	105,570	95,080	85,400	68,340

R-454A		Capacity BTUH @ 95°F Ambient by SST									
Model	Compressor	+40°F	+35°F	+30°F	+25°F	+20°F	+15°F	+10°F	+5°F	+0°F	-10°F
BCH0065M^ACY	**YB44KAE**	**75,670**	**69,670**	**63,900**	**58,400**	**53,190**	**48,290**	**43,710**	**39,470**	**35,490**	**28,450**
BCH0070M^ACY	**YB51KAE**	**93,110**	**85,310**	**77,850**	**70,810**	**64,200**	**58,050**	**52,330**	**47,040**	**42,180**	**33,530**
BCH0075M^ACY	**YB56KAE**	**103,680**	**95,010**	**86,790**	**78,940**	**71,590**	**64,780**	**58,420**	**52,600**	**47,200**	**37,660**
BCH0086M^ACY	**YB68KAE**	**120,830**	**110,830**	**101,400**	**92,410**	**83,950**	**76,120**	**68,740**	**61,920**	**55,640**	**44,690**
BCH0100M^ACY	**YB83KAE**	**140,740**	**129,920**	**119,550**	**109,540**	**99,990**	**91,090**	**82,690**	**74,850**	**67,550**	**54,480**
BCH0141M^ACY	**YB100KAE**	**178,430**	**163,930**	**150,200**	**137,090**	**124,650**	**113,060**	**102,210**	**92,130**	**82,850**	**66,490**

R-454A		Capacity BTUH @ 100°F Ambient by SST									
Model	Compressor	+40°F	+35°F	+30°F	+25°F	+20°F	+15°F	+10°F	+5°F	+0°F	-10°F
BCH0065M^ACY	YB44KAE	72,740	67,000	61,530	56,280	51,280	46,620	42,230	38,150	34,340	27,590
BCH0070M^ACY	YB51KAE	89,770	82,290	75,140	68,360	62,010	56,130	50,610	45,550	40,850	32,550
BCH0075M^ACY	YB56KAE	100,000	91,660	83,710	76,250	69,180	62,610	56,510	50,900	45,720	36,550
BCH0086M^ACY	YB68KAE	116,100	106,730	97,660	89,060	80,930	73,390	66,360	59,880	53,880	43,440
BCH0100M^ACY	YB83KAE	135,020	124,700	114,810	105,240	96,270	87,770	79,780	72,320	65,350	-
BCH0141M^ACY	YB100KAE	171,390	157,810	144,750	132,190	120,380	109,270	98,860	89,210	80,320	64,690

R-454A		Capacity BTUH @ 110°F Ambient by SST									
Model	Compressor	+40°F	+35°F	+30°F	+25°F	+20°F	+15°F	+10°F	+5°F	+0°F	-10°F
BCH0065M^ACY	YB44KAE	-	-	-	51,850	47,350	43,100	39,130	35,440	31,960	-
BCH0070M^ACY	YB51KAE	82,850	76,050	69,600	63,400	57,570	52,110	47,120	42,470	38,180	-
BCH0075M^ACY	YB56KAE	92,290	84,750	77,490	70,670	64,180	58,140	52,570	47,440	42,680	-
BCH0086M^ACY	YB68KAE	-	98,110	89,980	82,200	74,850	67,980	61,620	55,760	50,340	-
BCH0100M^ACY	YB83KAE	-	-	-	-	-	-	73,850	67,180	60,960	-
BCH0141M^ACY	YB100KAE	-	-	-	122,370	111,640	101,610	92,180	83,420	75,370	-

Notes:
^ C = 208-230/3/60, D = 460/3/60, E = 575/3/60
20°F Max Superheat

A2L PERFORMANCE DATA – R-454C

Medium Temperature Models - Scroll Compressors

Please consult AWEF table on page 26 to confirm DOE compliance per model

R-454C		Capacity BTUH @ 90°F Ambient by SST									
Model	Compressor	+40°F	+35°F	+30°F	+25°F	+20°F	+15°F	+10°F	+5°F	+0°F	-10°F
BCH0065M^ACY	YB44KAE	69,060	63,270	57,740	52,560	47,660	43,120	38,880	34,980	31,380	25,020
BCH0070M^ACY	YB51KAE	83,840	76,560	69,650	63,170	57,130	51,520	46,340	41,520	37,110	29,360
BCH0075M^ACY	YB56KAE	92,930	84,870	77,250	70,120	63,440	57,330	51,650	46,370	41,520	32,920
BCH0086M^ACY	YB68KAE	109,680	100,390	91,490	83,100	75,220	67,930	61,100	54,890	49,130	39,060
BCH0100M^ACY	YB83KAE	130,010	119,360	109,160	99,530	90,420	81,900	73,980	66,620	59,830	47,860
BCH0141M^ACY	YB100KAE	161,410	147,800	134,820	122,580	111,060	100,340	90,350	81,110	72,650	57,760

R-454C		Capacity BTUH @ 95°F Ambient by SST									
Model	Compressor	+40°F	+35°F	+30°F	+25°F	+20°F	+15°F	+10°F	+5°F	+0°F	-10°F
BCH0065M^ACY	**YB44KAE**	**66,720**	**61,160**	**55,840**	**50,810**	**46,120**	**41,710**	**37,640**	**33,880**	**30,410**	**24,280**
BCH0070M^ACY	**YB51KAE**	**81,100**	**74,060**	**67,410**	**61,150**	**55,290**	**49,900**	**44,850**	**40,210**	**35,950**	**28,430**
BCH0075M^ACY	**YB56KAE**	**89,900**	**82,150**	**74,770**	**67,900**	**61,450**	**55,540**	**50,050**	**44,940**	**40,250**	**31,920**
BCH0086M^ACY	**YB68KAE**	**106,000**	**96,980**	**88,440**	**80,330**	**72,750**	**65,700**	**59,140**	**53,090**	**47,550**	**37,850**
BCH0100M^ACY	**YB83KAE**	**125,020**	**115,070**	**105,270**	**95,980**	**87,260**	**79,100**	**71,480**	**64,410**	**57,900**	**46,470**
BCH0141M^ACY	**YB100KAE**	**155,810**	**142,750**	**130,270**	**118,450**	**107,380**	**97,050**	**87,430**	**78,520**	**70,370**	**56,050**

R-454C		Capacity BTUH @ 100°F Ambient by SST									
Model	Compressor	+40°F	+35°F	+30°F	+25°F	+20°F	+15°F	+10°F	+5°F	+0°F	-10°F
BCH0065M^ACY	YB44KAE	64,320	58,990	53,900	49,070	44,490	40,330	36,380	32,760	29,410	23,530
BCH0070M^ACY	YB51KAE	78,280	71,540	65,120	59,080	53,410	48,200	43,360	38,880	34,750	27,510
BCH0075M^ACY	YB56KAE	86,860	79,360	72,290	65,660	59,440	53,730	48,420	43,490	38,960	30,900
BCH0086M^ACY	YB68KAE	102,240	93,600	85,310	77,550	70,220	63,440	57,090	51,270	45,970	36,630
BCH0100M^ACY	YB83KAE	120,230	110,710	101,340	92,450	84,060	76,260	68,970	62,220	55,970	45,100
BCH0141M^ACY	YB100KAE	150,130	137,630	125,660	114,310	103,650	93,750	84,460	75,940	68,100	54,350

R-454C		Capacity BTUH @ 110°F Ambient by SST									
Model	Compressor	+40°F	+35°F	+30°F	+25°F	+20°F	+15°F	+10°F	+5°F	+0°F	-10°F
BCH0065M^ACY	YB44KAE	-	54,540	49,880	45,400	41,260	37,420	33,810	30,490	27,390	-
BCH0070M^ACY	YB51KAE	72,610	66,390	60,450	54,880	49,650	44,830	40,350	36,180	32,350	-
BCH0075M^ACY	YB56KAE	80,560	73,710	67,180	61,010	55,310	50,020	45,090	40,520	36,300	-
BCH0086M^ACY	YB68KAE	94,480	86,610	79,040	71,870	65,130	58,820	53,010	47,670	42,760	-
BCH0100M^ACY	YB83KAE	-	-	-	85,180	77,590	70,550	63,920	57,780	52,190	-
BCH0141M^ACY	YB100KAE	-	-	116,250	105,920	96,070	87,030	78,570	70,750	63,570	-

Notes:

^ C = 208-230/3/60, D = 460/3/60, E = 575/3/60

20°F Max Superheat

A2L PERFORMANCE DATA – R-455A

Medium Temperature Models - Scroll Compressors

Please consult AWEF table on page 26 to confirm DOE compliance per model

R-455A		Capacity BTUH @ 90°F Ambient by SST									
Model	Compressor	+40°F	+35°F	+30°F	+25°F	+20°F	+15°F	+10°F	+5°F	+0°F	-10°F
BCH0065M^ACY	YB44KAE	72,490	66,470	60,660	55,200	50,060	45,290	40,850	36,730	32,930	26,270
BCH0070M^ACY	YB51KAE	87,900	80,250	73,000	66,210	59,850	53,970	48,520	43,510	38,880	30,760
BCH0075M^ACY	YB56KAE	97,720	89,220	81,180	73,640	66,640	60,170	54,160	48,640	43,540	34,520
BCH0086M^ACY	YB68KAE	115,200	105,340	96,020	87,190	78,970	71,300	64,160	57,590	51,570	41,100
BCH0100M^ACY	YB83KAE	136,300	125,310	114,520	104,450	94,920	86,010	77,750	69,980	62,910	50,420
BCH0141M^ACY	YB100KAE	168,710	154,500	140,960	128,230	116,240	105,090	94,750	85,140	76,280	60,690

R-455A		Capacity BTUH @ 95°F Ambient by SST									
Model	Compressor	+40°F	+35°F	+30°F	+25°F	+20°F	+15°F	+10°F	+5°F	+0°F	-10°F
BCH0065M^ACY	**YB44KAE**	**70,040**	**64,210**	**58,670**	**53,400**	**48,450**	**43,840**	**39,560**	**35,590**	**31,930**	**25,510**
BCH0070M^ACY	**YB51KAE**	**85,020**	**77,650**	**70,660**	**64,090**	**57,950**	**52,270**	**47,000**	**42,140**	**37,690**	**29,840**
BCH0075M^ACY	**YB56KAE**	**94,480**	**86,300**	**78,600**	**71,310**	**64,570**	**58,310**	**52,500**	**47,160**	**42,220**	**33,500**
BCH0086M^ACY	**YB68KAE**	**111,230**	**101,840**	**92,840**	**84,330**	**76,360**	**68,980**	**62,070**	**55,760**	**49,960**	**39,900**
BCH0100M^ACY	**YB83KAE**	**131,360**	**120,730**	**110,440**	**100,720**	**91,620**	**83,090**	**75,110**	**67,740**	**60,940**	**49,050**
BCH0141M^ACY	**YB100KAE**	**162,770**	**149,170**	**136,250**	**123,980**	**112,440**	**101,710**	**91,700**	**82,470**	**73,950**	**58,970**

R-455A		Capacity BTUH @ 100°F Ambient by SST									
Model	Compressor	+40°F	+35°F	+30°F	+25°F	+20°F	+15°F	+10°F	+5°F	+0°F	-10°F
BCH0065M^ACY	YB44KAE	67,530	61,960	56,590	51,550	46,800	42,360	38,230	34,410	30,910	24,740
BCH0070M^ACY	YB51KAE	82,140	75,040	68,290	61,940	56,030	50,550	45,460	40,790	36,470	28,930
BCH0075M^ACY	YB56KAE	91,300	83,430	75,970	68,960	62,460	56,430	50,820	45,650	40,880	32,470
BCH0086M^ACY	YB68KAE	107,290	98,200	89,580	81,410	73,730	66,610	59,980	53,920	48,340	38,690
BCH0100M^ACY	YB83KAE	126,080	116,010	106,240	97,040	88,310	80,130	72,520	65,490	59,000	-
BCH0141M^ACY	YB100KAE	156,860	143,870	131,420	119,660	108,600	98,280	88,670	79,780	71,610	-
BCH0141M^ACY	YB100KAE	156,860	143,870	131,420	119,660	108,600	98,280	88,670	79,780	71,610	-

R-455A		Capacity BTUH @ 110°F Ambient by SST									
Model	Compressor	+40°F	+35°F	+30°F	+25°F	+20°F	+15°F	+10°F	+5°F	+0°F	-10°F
BCH0065M^ACY	YB44KAE	-	-	-	47,760	43,400	39,330	35,530	32,030	28,820	-
BCH0070M^ACY	YB51KAE	76,120	69,590	63,380	57,590	52,100	47,050	42,360	38,030	34,050	-
BCH0075M^ACY	YB56KAE	84,740	77,510	70,610	64,170	58,160	52,570	47,370	42,560	38,150	-
BCH0086M^ACY	YB68KAE	-	-	82,950	75,460	68,400	61,860	55,770	50,200	45,080	-
BCH0100M^ACY	YB83KAE	-	-	-	-	-	74,220	67,340	60,990	55,170	-
BCH0141M^ACY	YB100KAE	-	-	-	110,940	100,800	91,370	82,590	74,460	67,010	-

Notes:

^ C = 208-230/3/60, D = 460/3/60, E = 575/3/60

20°F Max Superheat

A1 PERFORMANCE DATA – R-404A/R-507A

Medium Temperature Models - Scroll Compressors

Please consult AWEF table on page 26 to confirm DOE compliance per model

R-404A/R-507A		Capacity BTUH @ 90°F Ambient by SST									
Model	Compressor	+40°F	+35°F	+30°F	+25°F	+20°F	+15°F	+10°F	+5°F	+0°F	-10°F
BC*0065M@ACZ	ZB48KCE	77,170	71,490	66,240	61,130	56,270	51,710	47,250	43,000	39,010	31,710
BC*0070M@ACZ	ZB58K5E	97,540	90,190	83,040	76,350	69,890	63,750	57,930	52,330	46,990	36,810
BC*0075M@ACZ	ZB66K5E	110,080	102,060	94,260	86,900	79,720	72,820	66,510	60,360	54,570	43,810
BC*0086M@ACZ	ZB76K5E	123,580	114,420	105,850	97,690	89,890	82,600	75,480	68,760	62,470	50,390
BC*0100M@ACZ	ZB95K5E	142,810	133,070	123,590	114,100	105,300	96,760	88,420	80,420	72,550	57,420
BC*0141M@ACZ	ZB114K5E	180,210	167,570	154,860	142,890	131,330	120,170	109,580	99,210	89,310	70,820

R-404A/R-507A		Capacity BTUH @ 95°F Ambient by SST									
Model	Compressor	+40°F	+35°F	+30°F	+25°F	+20°F	+15°F	+10°F	+5°F	+0°F	-10°F
BC*0065M@ACZ	**ZB48KCE**	**73,500**	**68,140**	**63,120**	**58,300**	**53,650**	**49,320**	**45,020**	**41,000**	**37,200**	**30,240**
BC*0070M@ACZ	**ZB58K5E**	**93,370**	**86,310**	**79,680**	**73,150**	**66,890**	**60,920**	**55,260**	**49,840**	**44,590**	**34,550**
BC*0075M@ACZ	**ZB66K5E**	**105,140**	**97,520**	**90,130**	**83,150**	**76,300**	**69,760**	**63,720**	**57,820**	**52,280**	**41,930**
BC*0086M@ACZ	**ZB76K5E**	**118,020**	**109,330**	**101,270**	**93,530**	**86,120**	**79,070**	**72,450**	**66,070**	**60,090**	**48,590**
BC*0100M@ACZ	**ZB95K5E**	**135,530**	**126,360**	**117,350**	**108,370**	**100,010**	**91,840**	**83,780**	**76,200**	**68,590**	**53,860**
BC*0141M@ACZ	**ZB114K5E**	**171,520**	**159,570**	**147,440**	**136,120**	**125,040**	**114,370**	**104,240**	**94,260**	**84,720**	**66,760**

R-404A/R-507A		Capacity BTUH @ 100°F Ambient by SST									
Model	Compressor	+40°F	+35°F	+30°F	+25°F	+20°F	+15°F	+10°F	+5°F	+0°F	-10°F
BC*0065M@ACZ	ZB48KCE	69,790	64,690	59,970	55,390	50,980	46,730	42,770	38,950	35,340	—
BC*0070M@ACZ	ZB58K5E	89,000	82,390	76,050	69,770	63,750	58,060	52,480	47,180	42,030	32,110
BC*0075M@ACZ	ZB66K5E	100,090	92,920	85,930	79,310	72,760	66,630	60,770	55,220	49,920	39,990
BC*0086M@ACZ	ZB76K5E	112,400	104,210	96,600	89,280	82,450	75,720	69,400	63,370	57,700	46,800
BC*0100M@ACZ	ZB95K5E	128,170	119,540	110,990	102,480	94,500	86,750	79,280	71,780	64,460	—
BC*0141M@ACZ	ZB114K5E	162,640	151,360	139,850	129,070	118,540	108,400	98,680	89,120	79,920	—

R-404A/R-507A		Capacity BTUH @ 110°F Ambient by SST									
Model	Compressor	+40°F	+35°F	+30°F	+25°F	+20°F	+15°F	+10°F	+5°F	+0°F	-10°F
BC*0065M@ACZ	ZB48KCE	—	—	—	49,390	45,400	—	—	—	—	—
BC*0070M@ACZ	ZB58K5E	80,120	74,120	68,360	62,600	56,960	51,660	46,470	41,420	36,540	—
BC*0075M@ACZ	ZB66K5E	89,850	83,480	77,480	71,350	65,490	60,140	54,830	49,820	45,020	—
BC*0086M@ACZ	ZB76K5E	—	93,780	87,090	80,680	74,590	68,740	63,160	57,900	—	—
BC*0100M@ACZ	ZB95K5E	—	—	—	—	—	76,000	69,310	—	—	—
BC*0141M@ACZ	ZB114K5E	—	—	—	—	104,980	96,090	86,990	78,240	—	—

Notes:
* H = Outdoor, N = Indoor
@ C = 208-230/3/60, D = 460/3/60, E = 575/3/60
20°F Max Superheat

A1 PERFORMANCE DATA – R-448A/R-449A

Medium Temperature Models - Scroll Compressors

Please consult AWEF table on page 26 to confirm DOE compliance per model

R-448A/R-449A		Capacity BTUH @ 90°F Ambient by SST									
Model	Compressor	+40°F	+35°F	+30°F	+25°F	+20°F	+15°F	+10°F	+5°F	+0°F	-10°F
BC*0065M@ACZ	ZB48KCE	78,750	72,150	65,840	59,920	54,250	48,990	44,090	39,590	35,490	28,390
BC*0070M@ACZ	ZB58K5E	96,260	87,510	79,120	71,240	63,930	57,190	51,010	45,450	40,490	32,300
BC*0075M@ACZ	ZB66K5E	108,670	99,160	89,840	81,060	72,860	65,370	58,480	52,340	46,930	38,460
BC*0086M@ACZ	ZB76K5E	122,870	112,200	102,050	92,310	83,240	74,870	67,290	60,470	54,460	44,960
BC*0100M@ACZ	ZB95K5E	146,390	133,550	121,290	109,740	99,090	88,870	79,190	69,950	60,840	43,070
BC*0141M@ACZ	ZB114K5E	184,480	167,570	151,530	136,480	122,610	109,520	97,230	85,630	74,580	53,090

R-448A/R-449A		Capacity BTUH @ 95°F Ambient by SST									
Model	Compressor	+40°F	+35°F	+30°F	+25°F	+20°F	+15°F	+10°F	+5°F	+0°F	-10°F
BC*0065M@ACZ	**ZB48KCE**	**75,790**	**69,490**	**63,540**	**57,760**	**52,340**	**47,320**	**42,650**	**38,430**	**34,590**	**28,090**
BC*0070M@ACZ	**ZB58K5E**	**93,110**	**84,710**	**76,690**	**69,140**	**62,120**	**55,640**	**49,680**	**44,300**	**39,490**	**31,520**
BC*0075M@ACZ	**ZB66K5E**	**104,710**	**95,730**	**86,910**	**78,590**	**70,810**	**63,700**	**57,180**	**51,370**	**46,290**	**38,410**
BC*0086M@ACZ	**ZB76K5E**	**118,360**	**108,350**	**98,810**	**89,620**	**81,080**	**73,220**	**66,110**	**59,750**	**54,200**	**—**
BC*0100M@ACZ	**ZB95K5E**	**139,890**	**127,630**	**115,900**	**104,740**	**94,230**	**84,490**	**74,970**	**65,820**	**56,650**	**—**
BC*0141M@ACZ	**ZB114K5E**	**176,950**	**160,710**	**145,280**	**130,740**	**117,260**	**104,440**	**92,310**	**80,790**	**69,790**	**48,120**

R-448A/R-449A		Capacity BTUH @ 100°F Ambient by SST									
Model	Compressor	+40°F	+35°F	+30°F	+25°F	+20°F	+15°F	+10°F	+5°F	+0°F	-10°F
BC*0065M@ACZ	ZB48KCE	72,860	66,830	61,120	55,620	50,470	45,720	41,320	37,380	33,830	27,980
BC*0070M@ACZ	ZB58K5E	89,530	81,720	74,080	66,900	60,200	54,030	48,320	43,170	38,560	—
BC*0075M@ACZ	ZB66K5E	100,600	92,180	83,870	76,050	68,740	62,080	56,000	50,600	45,900	—
BC*0086M@ACZ	ZB76K5E	113,700	104,350	95,450	86,880	78,940	71,680	65,130	59,330	54,360	—
BC*0100M@ACZ	ZB95K5E	—	121,450	110,210	99,510	89,320	79,840	70,420	61,360	52,280	—
BC*0141M@ACZ	ZB114K5E	169,080	153,570	138,700	124,650	111,570	99,030	87,080	75,450	64,520	42,850

R-448A/R-449A		Capacity BTUH @ 110°F Ambient by SST									
Model	Compressor	+40°F	+35°F	+30°F	+25°F	+20°F	+15°F	+10°F	+5°F	+0°F	-10°F
BC*0065M@ACZ	ZB48KCE	—	—	—	51,520	46,970	42,800	39,030	35,710	—	—
BC*0070M@ACZ	ZB58K5E	81,970	75,100	68,310	61,900	55,940	50,490	45,400	40,830	—	—
BC*0075M@ACZ	ZB66K5E	91,880	84,620	77,440	70,730	64,480	58,880	53,840	49,460	—	—
BC*0086M@ACZ	ZB76K5E	—	—	88,480	81,290	74,710	68,800	63,640	59,250	—	—
BC*0100M@ACZ	ZB95K5E	—	—	—	—	—	69,660	60,650	51,760	—	—
BC*0141M@ACZ	ZB114K5E	—	—	—	—	99,290	87,260	75,660	64,260	—	—

Notes:
* H = Outdoor, N = Indoor
@ C = 208-230/3/60, D = 460/3/60, E = 575/3/60
20°F Max Superheat

A1 PERFORMANCE DATA – R-407A/R-407F

Medium Temperature Models - Scroll Compressors

Please consult AWEF table on page 26 to confirm DOE compliance per model

R-407A/R-407F		Capacity BTUH @ 90°F Ambient by SST									
Model	Compressor	+40°F	+35°F	+30°F	+25°F	+20°F	+15°F	+10°F	+5°F	+0°F	-10°F
BC*0065M@ACZ	ZB48KCE	78,690	72,600	66,610	60,880	55,240	49,890	44,790	40,010	35,620	27,830
BC*0070M@ACZ	ZB58K5E	96,810	88,720	80,910	73,690	66,900	60,630	54,560	48,660	42,810	30,800
BC*0075M@ACZ	ZB66K5E	109,470	100,600	92,040	83,620	75,530	67,810	60,620	53,840	47,570	36,710
BC*0086M@ACZ	ZB76K5E	125,510	115,590	105,720	96,180	86,680	77,590	68,930	61,020	53,730	41,930
BC*0100M@ACZ	ZB95K5E	143,590	133,110	122,480	111,830	101,300	91,190	81,190	71,730	62,930	48,410
BC*0141M@ACZ	ZB114K5E	182,540	168,040	153,710	139,770	126,400	113,490	101,240	89,780	79,160	61,000

R-407A/R-407F		Capacity BTUH @ 95°F Ambient by SST									
Model	Compressor	+40°F	+35°F	+30°F	+25°F	+20°F	+15°F	+10°F	+5°F	+0°F	-10°F
BC*0065M@ACZ	**ZB48KCE**	**75,410**	**69,590**	**63,860**	**58,370**	**52,960**	**47,810**	**42,930**	**38,320**	**34,110**	**26,670**
BC*0070M@ACZ	**ZB58K5E**	**93,110**	**85,390**	**78,030**	**71,130**	**64,550**	**58,450**	**52,450**	**46,560**	**40,650**	**28,320**
BC*0075M@ACZ	**ZB66K5E**	**105,220**	**96,680**	**88,430**	**80,280**	**72,510**	**65,170**	**58,200**	**51,730**	**45,770**	**35,580**
BC*0086M@ACZ	**ZB76K5E**	**120,630**	**111,020**	**101,470**	**92,240**	**83,110**	**74,420**	**66,200**	**58,760**	**52,050**	**41,540**
BC*0100M@ACZ	**ZB95K5E**	**136,880**	**126,830**	**116,640**	**106,440**	**96,620**	**86,710**	**77,190**	**68,290**	**60,070**	**46,830**
BC*0141M@ACZ	**ZB114K5E**	**174,860**	**160,930**	**147,150**	**133,610**	**120,870**	**108,480**	**96,730**	**85,770**	**75,660**	**58,630**

R-407A/R-407F		Capacity BTUH @ 100°F Ambient by SST									
Model	Compressor	+40°F	+35°F	+30°F	+25°F	+20°F	+15°F	+10°F	+5°F	+0°F	-10°F
BC*0065M@ACZ	ZB48KCE	72,060	66,510	61,190	55,800	50,630	45,700	41,030	36,620	32,580	25,480
BC*0070M@ACZ	ZB58K5E	89,230	82,020	75,020	68,390	62,030	56,080	50,130	44,250	38,260	25,640
BC*0075M@ACZ	ZB66K5E	100,840	92,810	84,710	76,900	69,440	62,420	55,780	49,640	44,020	34,550
BC*0086M@ACZ	ZB76K5E	115,630	106,360	97,180	88,310	79,570	71,350	63,640	56,720	50,610	41,650
BC*0100M@ACZ	ZB95K5E	—	120,400	110,660	100,950	91,580	82,200	73,230	64,920	57,350	45,550
BC*0141M@ACZ	ZB114K5E	166,980	153,690	140,470	127,760	115,250	103,390	92,180	81,770	72,220	56,380

R-407A/R-407F		Capacity BTUH @ 110°F Ambient by SST									
Model	Compressor	+40°F	+35°F	+30°F	+25°F	+20°F	+15°F	+10°F	+5°F	+0°F	-10°F
BC*0065M@ACZ	ZB48KCE	—	—	—	—	45,840	41,380	37,160	33,180	29,560	23,170
BC*0070M@ACZ	ZB58K5E	81,530	74,890	68,520	62,430	56,530	50,750	44,940	39,030	32,900	19,760
BC*0075M@ACZ	ZB66K5E	91,810	84,480	77,100	69,990	63,180	56,940	51,070	45,610	40,770	32,920
BC*0086M@ACZ	ZB76K5E	—	—	88,760	80,600	72,850	65,690	59,170	53,520	48,860	43,450
BC*0100M@ACZ	ZB95K5E	—	—	—	—	—	—	65,520	58,490	52,490	44,140
BC*0141M@ACZ	ZB114K5E	—	—	—	—	—	93,120	83,090	73,810	65,600	52,460

Notes:
* H = Outdoor, N = Indoor
@ C = 208-230/3/60, D = 460/3/60, E = 575/3/60
20°F Max Superheat

A1 PERFORMANCE DATA – R-407C

Medium Temperature Models - Scroll Compressors

Please consult AWEF table on page 26 to confirm DOE compliance per model

R-407C		Capacity BTUH @ 90°F Ambient by SST									
Model	Compressor	+40°F	+35°F	+30°F	+25°F	+20°F	+15°F	+10°F	+5°F	+0°F	-10°F
BC*0065M@ACZ	ZB48KCE	71,130	65,160	59,300	53,610	48,150	42,820	—	—	—	—
BC*0070M@ACZ	ZB58K5E	90,610	82,250	74,430	67,060	60,330	53,930	48,010	42,400	37,070	—
BC*0075M@ACZ	ZB66K5E	102,960	93,420	84,540	76,210	68,450	61,330	54,690	48,420	42,500	—
BC*0086M@ACZ	ZB76K5E	118,020	107,560	97,670	88,460	79,780	71,780	64,380	57,560	51,300	—
BC*0100M@ACZ	ZB95K5E	138,290	125,810	113,930	102,750	92,270	82,520	73,440	64,780	56,570	—
BC*0141M@ACZ	ZB114K5E	168,890	153,790	139,360	125,770	113,200	101,460	—	—	—	—

R-407C		Capacity BTUH @ 95°F Ambient by SST									
Model	Compressor	+40°F	+35°F	+30°F	+25°F	+20°F	+15°F	+10°F	+5°F	+0°F	-10°F
BC*0065M@ACZ	**ZB48KCE**	**68,560**	**62,800**	**57,120**	**51,590**	**46,270**	**41,070**	**—**	**—**	**—**	**—**
BC*0070M@ACZ	**ZB58K5E**	**87,950**	**79,790**	**72,110**	**64,840**	**58,170**	**51,910**	**46,080**	**40,550**	**35,310**	**—**
BC*0075M@ACZ	**ZB66K5E**	**100,160**	**90,850**	**82,160**	**74,010**	**66,460**	**59,440**	**52,940**	**46,820**	**41,010**	**—**
BC*0086M@ACZ	**ZB76K5E**	**114,660**	**104,520**	**94,890**	**85,960**	**77,540**	**69,770**	**62,600**	**56,010**	**49,970**	**—**
BC*0100M@ACZ	**ZB95K5E**	**133,550**	**121,390**	**109,830**	**98,980**	**88,780**	**79,280**	**70,430**	**62,000**	**—**	**—**
BC*0141M@ACZ	**ZB114K5E**	**163,670**	**148,980**	**134,950**	**121,730**	**109,490**	**—**	**—**	**—**	**—**	**—**

R-407C		Capacity BTUH @ 100°F Ambient by SST									
Model	Compressor	+40°F	+35°F	+30°F	+25°F	+20°F	+15°F	+10°F	+5°F	+0°F	-10°F
BC*0065M@ACZ	ZB48KCE	65,940	60,350	54,860	49,560	—	—	—	—	—	—
BC*0070M@ACZ	ZB58K5E	85,190	77,190	69,620	62,490	55,910	49,780	43,990	38,560	33,400	—
BC*0075M@ACZ	ZB66K5E	97,290	88,190	79,710	71,740	64,360	57,490	51,130	45,140	—	—
BC*0086M@ACZ	ZB76K5E	111,260	101,430	92,120	83,460	75,290	67,780	60,840	54,470	—	—
BC*0100M@ACZ	ZB95K5E	128,670	116,870	105,680	95,100	85,180	75,940	67,340	59,120	—	—
BC*0141M@ACZ	ZB114K5E	158,310	144,070	130,420	117,580	—	—	—	—	—	—

R-407C		Capacity BTUH @ 110°F Ambient by SST									
Model	Compressor	+40°F	+35°F	+30°F	+25°F	+20°F	+15°F	+10°F	+5°F	+0°F	-10°F
BC*0065M@ACZ	ZB48KCE	—	—	—	—	—	—	—	—	—	—
BC*0070M@ACZ	ZB58K5E	79,270	71,560	64,270	57,410	50,950	44,970	39,430	—	—	—
BC*0075M@ACZ	ZB66K5E	91,280	82,750	74,590	66,990	59,940	53,380	47,320	—	—	—
BC*0086M@ACZ	ZB76K5E	—	—	86,540	78,440	70,810	63,820	—	—	—	—
BC*0100M@ACZ	ZB95K5E	—	—	—	—	77,730	69,150	—	—	—	—
BC*0141M@ACZ	ZB114K5E	147,200	133,880	—	—	—	—	—	—	—	—

Notes:
* H = Outdoor, N = Indoor
@ C = 208-230/3/60, D = 460/3/60, E = 575/3/60
20°F Max Superheat

A2L PERFORMANCE DATA – R-454A

Low Temperature Models - Scroll Compressors

Please consult AWEF table on page 27 to confirm DOE compliance per model

R-454A		Capacity BTUH @ 90°F Ambient by SST								
Model	Compressor	+0°F	-5°F	-10°F	-15°F	-20°F	-25°F	-30°F	-35°F	-40°F
BCH0075L^ACY	YF19KAE	41,600	37,430	33,600	30,050	26,790	23,810	21,080	18,540	16,190
BCH0100L^ACY	YF26KAE	53,500	48,500	43,790	39,340	35,210	31,380	27,850	24,580	21,560
BCH0130L^ACY	YF32KAE	68,970	61,920	55,400	49,420	43,960	38,960	34,410	30,200	26,330
BCH0150L^ACY	YF38KAE	81,720	73,610	66,040	59,010	52,480	46,530	41,130	36,220	31,790

R-454A		Capacity BTUH @ 95°F Ambient by SST								
Model	Compressor	+0°F	-5°F	-10°F	-15°F	-20°F	-25°F	-30°F	-35°F	-40°F
BCH0075L^ACY	**YF19KAE**	**40,230**	**36,220**	**32,540**	**29,120**	**25,980**	**23,100**	**20,470**	**18,040**	**15,770**
BCH0100L^ACY	**YF26KAE**	**51,560**	**46,800**	**42,280**	**38,050**	**34,100**	**30,420**	**27,020**	**23,880**	**20,980**
BCH0130L^ACY	**YF32KAE**	**66,820**	**60,010**	**53,730**	**47,960**	**42,680**	**37,850**	**33,450**	**29,390**	**25,640**
BCH0150L^ACY	**YF38KAE**	**79,120**	**71,320**	**64,030**	**57,240**	**50,940**	**45,200**	**39,970**	**35,220**	**30,930**

R-454A		Capacity BTUH @ 100°F Ambient by SST								
Model	Compressor	+0°F	-5°F	-10°F	-15°F	-20°F	-25°F	-30°F	-35°F	-40°F
BCH0075L^ACY	YF19KAE	38,820	34,970	31,450	28,150	25,150	22,390	19,860	17,530	15,350
BCH0100L^ACY	YF26KAE	49,550	45,000	40,760	36,720	32,940	29,420	26,180	23,170	20,390
BCH0130L^ACY	YF32KAE	64,620	58,090	52,030	46,460	41,380	36,720	32,480	28,560	24,940
BCH0150L^ACY	YF38KAE	76,440	68,980	61,990	55,470	49,390	43,840	38,790	34,200	30,040

R-454A		Capacity BTUH @ 110°F Ambient by SST								
Model	Compressor	+0°F	-5°F	-10°F	-15°F	-20°F	-25°F	-30°F	-35°F	-40°F
BCH0075L^ACY	YF19KAE	35,900	32,410	29,190	26,180	23,430	20,910	18,610	16,470	14,490
BCH0100L^ACY	YF26KAE	-	-	37,500	-	-	-	-	21,680	19,150
BCH0130L^ACY	YF32KAE	60,040	54,040	48,500	43,380	38,670	34,380	30,460	26,840	23,490
BCH0150L^ACY	YF38KAE	70,980	-	-	-	46,180	41,050	36,370	32,100	28,240

Notes:

^ C = 208-230/3/60, D = 460/3/60, E = 575/3/60

A2L PERFORMANCE DATA – R-454C

Low Temperature Models - Scroll Compressors

Please consult AWEF table on page 27 to confirm DOE compliance per model

R-454C		Capacity BTUH @ 90°F Ambient by SST								
Model	Compressor	+0°F	-5°F	-10°F	-15°F	-20°F	-25°F	-30°F	-35°F	-40°F
BCH0075L^ACY	YF19KAE	35,590	31,900	28,530	25,420	22,580	19,990	17,630	15,460	13,440
BCH0100L^ACY	YF26KAE	46,420	41,820	37,530	33,530	29,840	26,440	23,360	20,540	17,970
BCH0130L^ACY	YF32KAE	58,610	52,430	46,770	41,570	36,850	32,560	28,670	25,110	21,850
BCH0150L^ACY	YF38KAE	70,280	63,070	56,380	50,190	44,510	39,320	34,650	30,400	26,600

R-454C		Capacity BTUH @ 95°F Ambient by SST								
Model	Compressor	+0°F	-5°F	-10°F	-15°F	-20°F	-25°F	-30°F	-35°F	-40°F
BCH0075L^ACY	**YF19KAE**	**34,470**	**30,900**	**27,640**	**24,650**	**21,910**	**19,400**	**17,130**	**15,030**	**13,090**
BCH0100L^ACY	**YF26KAE**	**44,840**	**40,440**	**36,320**	**32,470**	**28,910**	**25,650**	**22,680**	**19,960**	**17,480**
BCH0130L^ACY	**YF32KAE**	**56,820**	**50,830**	**45,360**	**40,350**	**35,780**	**31,620**	**27,850**	**24,410**	**21,250**
BCH0150L^ACY	**YF38KAE**	**68,090**	**61,120**	**54,660**	**48,690**	**43,180**	**38,180**	**33,650**	**29,560**	**25,880**

R-454C		Capacity BTUH @ 100°F Ambient by SST								
Model	Compressor	+0°F	-5°F	-10°F	-15°F	-20°F	-25°F	-30°F	-35°F	-40°F
BCH0075L^ACY	YF19KAE	33,320	29,890	26,740	23,850	21,210	18,810	16,610	14,590	12,730
BCH0100L^ACY	YF26KAE	43,270	39,030	35,080	31,380	27,970	24,840	21,980	19,360	16,980
BCH0130L^ACY	YF32KAE	55,000	49,210	43,930	39,090	34,680	30,660	27,020	23,690	20,640
BCH0150L^ACY	YF38KAE	65,850	59,150	52,920	47,160	41,840	37,020	32,650	28,700	25,150

R-454C		Capacity BTUH @ 110°F Ambient by SST								
Model	Compressor	+0°F	-5°F	-10°F	-15°F	-20°F	-25°F	-30°F	-35°F	-40°F
BCH0075L^ACY	YF19KAE	30,950	27,790	24,900	22,230	19,800	17,580	15,560	13,700	11,980
BCH0100L^ACY	YF26KAE	39,880	-	-	-	-	-	20,540	18,140	15,970
BCH0130L^ACY	YF32KAE	51,250	45,900	41,010	36,510	32,420	28,700	25,320	22,220	19,390
BCH0150L^ACY	YF38KAE	61,300	55,110	49,370	-	39,120	34,650	30,610	26,960	23,680

Notes:

^ C = 208-230/3/60, D = 460/3/60, E = 575/3/60

A2L PERFORMANCE DATA – R-455A

Low Temperature Models - Scroll Compressors

Please consult AWEF table on page 27 to confirm DOE compliance per model

R-455A		Capacity BTUH @ 90°F Ambient by SST								
Model	Compressor	+0°F	-5°F	-10°F	-15°F	-20°F	-25°F	-30°F	-35°F	-40°F
BCH0075L^ACY	YF19KAE	37,420	33,530	29,990	26,730	23,750	21,030	18,560	16,290	14,190
BCH0100L^ACY	YF26KAE	48,960	44,130	39,620	35,410	31,530	27,950	24,690	21,710	18,980
BCH0130L^ACY	YF32KAE	61,620	55,120	49,190	43,760	38,810	34,300	30,220	26,470	23,030
BCH0150L^ACY	YF38KAE	73,730	66,160	59,140	52,630	46,680	41,250	36,340	31,910	27,930

R-455A		Capacity BTUH @ 95°F Ambient by SST								
Model	Compressor	+0°F	-5°F	-10°F	-15°F	-20°F	-25°F	-30°F	-35°F	-40°F
BCH0075L^ACY	**YF19KAE**	**36,250**	**32,500**	**29,070**	**25,920**	**23,050**	**20,430**	**18,040**	**15,850**	**13,830**
BCH0100L^ACY	**YF26KAE**	**47,300**	**42,660**	**38,340**	**34,310**	**30,570**	**27,120**	**23,980**	**21,110**	**18,470**
BCH0130L^ACY	**YF32KAE**	**59,740**	**53,470**	**47,730**	**42,480**	**37,690**	**33,330**	**29,370**	**25,740**	**22,410**
BCH0150L^ACY	**YF38KAE**	**71,410**	**64,140**	**57,350**	**51,070**	**45,310**	**40,060**	**35,320**	**31,020**	**27,180**

R-455A		Capacity BTUH @ 100°F Ambient by SST								
Model	Compressor	+0°F	-5°F	-10°F	-15°F	-20°F	-25°F	-30°F	-35°F	-40°F
BCH0075L^ACY	YF19KAE	35,060	31,440	28,140	25,110	22,340	19,810	17,520	15,410	13,460
BCH0100L^ACY	YF26KAE	45,590	41,180	37,040	33,170	29,580	26,270	23,250	20,490	17,950
BCH0130L^ACY	YF32KAE	57,850	51,780	46,240	41,170	36,540	32,330	28,500	25,000	21,780
BCH0150L^ACY	YF38KAE	69,090	62,070	55,570	49,490	43,920	38,860	34,280	30,130	26,420

R-455A		Capacity BTUH @ 110°F Ambient by SST								
Model	Compressor	+0°F	-5°F	-10°F	-15°F	-20°F	-25°F	-30°F	-35°F	-40°F
BCH0075L^ACY	YF19KAE	32,600	29,280	26,240	-	20,890	18,570	16,450	14,510	12,720
BCH0100L^ACY	YF26KAE	-	-	-	-	-	-	-	19,220	16,890
BCH0130L^ACY	YF32KAE	53,930	48,320	43,190	-	34,190	30,280	26,730	23,470	20,480
BCH0150L^ACY	YF38KAE	64,350	-	-	-	-	-	32,170	28,330	24,880

Notes:

^ C = 208-230/3/60, D = 460/3/60, E = 575/3/60

A1 PERFORMANCE DATA – R-404A/R-507A

Low Temperature Models - Scroll Compressors

Please consult AWEF table on page 27 to confirm DOE compliance per model

R-404A/R-507A		Capacity BTUH @ 90°F Ambient by SST								
Model	Compressor	+0°F	-5°F	-10°F	-15°F	-20°F	-25°F	-30°F	-35°F	-40°F
BC*0075L@ACZ	ZF25K4E	42,170	38,520	34,960	31,610	28,460	25,560	22,850	20,350	18,060
BC*0100L@BCZ	ZF34K5E	52,610	48,550	44,450	40,530	36,780	33,240	29,880	26,690	23,670
BC*0130L@BCZ	ZF41K5E	70,440	64,440	58,730	53,360	48,150	43,250	38,600	34,130	29,850
BC*0150L@BCZ	ZF49K5E	79,070	72,190	65,690	59,530	53,680	48,300	43,250	38,430	33,920

R-404A/R-507A		Capacity BTUH @ 95°F Ambient by SST								
Model	Compressor	+0°F	-5°F	-10°F	-15°F	-20°F	-25°F	-30°F	-35°F	-40°F
BC*0075L@ACZ	**ZF25K4E**	**40,420**	**36,880**	**33,580**	**30,400**	**27,430**	**24,660**	**22,100**	**19,740**	**17,580**
BC*0100L@BCZ	**ZF34K5E**	**49,970**	**46,190**	**42,350**	**38,660**	**35,140**	**31,790**	**28,620**	**25,590**	**22,730**
BC*0130L@BCZ	**ZF41K5E**	**67,440**	**61,770**	**56,400**	**51,230**	**46,320**	**41,640**	**37,180**	**32,880**	**28,740**
BC*0150L@BCZ	**ZF49K5E**	**75,530**	**69,040**	**62,880**	**57,040**	**51,480**	**46,380**	**41,550**	**36,950**	**32,650**

R-404A/R-507A		Capacity BTUH @ 100°F Ambient by SST								
Model	Compressor	+0°F	-5°F	-10°F	-15°F	-20°F	-25°F	-30°F	-35°F	-40°F
BC*0075L@ACZ	ZF25K4E	38,650	35,360	32,190	29,190	26,390	23,770	21,360	19,140	17,130
BC*0100L@BCZ	ZF34K5E	—	—	—	—	33,430	30,290	27,320	24,460	21,760
BC*0130L@BCZ	ZF41K5E	64,340	59,000	53,880	49,050	44,390	39,940	35,670	31,550	27,570
BC*0150L@BCZ	ZF49K5E	71,890	65,770	59,980	54,460	49,190	44,350	39,790	35,430	31,330

R-404A/R-507A		Capacity BTUH @ 110°F Ambient by SST								
Model	Compressor	+0°F	-5°F	-10°F	-15°F	-20°F	-25°F	-30°F	-35°F	-40°F
BC*0075L@ACZ	ZF25K4E	—	—	—	—	—	22,020	19,930	18,020	16,300
BC*0100L@BCZ	ZF34K5E	—	—	—	—	—	—	—	—	—
BC*0130L@BCZ	ZF41K5E	57,840	53,100	48,750	44,400	40,240	36,250	32,400	28,640	24,980
BC*0150L@BCZ	ZF49K5E	—	—	—	—	—	—	—	32,250	28,570

Notes:
* H = Outdoor, N = Indoor models only available as model Rev A
@ C = 208-230/3/60, D = 460/3/60, E = 575/3/60

A1 PERFORMANCE DATA – R-448A/R-449A

Low Temperature Models - Scroll Compressors

Please consult AWEF table on page 27 to confirm DOE compliance per model

R-448A/R-449A		Capacity BTUH @ 90°F Ambient by SST								
Model	Compressor	+0°F	-5°F	-10°F	-15°F	-20°F	-25°F	-30°F	-35°F	-40°F
BC*0075L@ACZ	ZF25K4E	40,360	36,240	32,420	28,870	25,650	22,720	20,090	17,770	15,730
BC*0100L@BCZ	ZF34K5E	51,380	46,450	41,790	37,360	33,220	29,350	25,770	22,410	19,280
BC*0130L@BCZ	ZF41K5E	66,930	60,210	53,960	48,140	42,730	37,720	33,110	28,820	24,840
BC*0150L@BCZ	ZF49K5E	79,680	71,820	64,430	57,440	50,980	44,940	39,430	34,370	29,790

R-448A/R-449A		Capacity BTUH @ 95°F Ambient by SST								
Model	Compressor	+0°F	-5°F	-10°F	-15°F	-20°F	-25°F	-30°F	-35°F	-40°F
BC*0075L@ACZ	**ZF25K4E**	**38,980**	**35,020**	**31,350**	**27,930**	**24,870**	**22,090**	**19,610**	**17,440**	**15,570**
BC*0100L@BCZ	**ZF34K5E**	**49,560**	**44,820**	**40,370**	**36,150**	**32,190**	**28,490**	**25,040**	**21,810**	**18,800**
BC*0130L@BCZ	**ZF41K5E**	**64,930**	**58,420**	**52,430**	**46,780**	**41,550**	**36,700**	**32,240**	**28,080**	**24,230**
BC*0150L@BCZ	**ZF49K5E**	**77,100**	**69,550**	**62,410**	**55,680**	**49,450**	**43,640**	**38,320**	**33,450**	**29,050**

R-448A/R-449A		Capacity BTUH @ 100°F Ambient by SST								
Model	Compressor	+0°F	-5°F	-10°F	-15°F	-20°F	-25°F	-30°F	-35°F	-40°F
BC*0075L@ACZ	ZF25K4E	37,600	33,800	30,280	27,030	24,110	21,500	19,180	17,170	15,470
BC*0100L@BCZ	ZF34K5E	47,620	43,160	38,930	34,920	31,140	27,590	24,300	21,210	18,340
BC*0130L@BCZ	ZF41K5E	62,830	56,580	50,820	45,370	40,320	35,650	31,350	27,340	23,630
BC*0150L@BCZ	ZF49K5E	74,380	67,150	60,330	53,860	47,880	42,300	37,190	32,530	28,310

R-448A/R-449A		Capacity BTUH @ 110°F Ambient by SST								
Model	Compressor	+0°F	-5°F	-10°F	-15°F	-20°F	-25°F	-30°F	-35°F	-40°F
BC*0075L@ACZ	ZF25K4E	—	—	—	—	—	—	18,480	16,820	15,480
BC*0100L@BCZ	ZF34K5E	—	—	—	—	—	—	—	20,030	17,460
BC*0130L@BCZ	ZF41K5E	58,440	52,700	47,420	42,400	37,760	33,470	29,510	25,830	22,420
BC*0150L@BCZ	ZF49K5E	—	—	—	—	—	39,530	34,860	30,630	26,830

Notes:
* H = Outdoor, N = Indoor models only available as model Rev A
@ C = 208-230/3/60, D = 460/3/60, E = 575/3/60

A1 PERFORMANCE DATA – R-407A/R-407F

Low Temperature Models - Scroll Compressors

Please consult AWEF table on page 27 to confirm DOE compliance per model

R-407A/R-407F		Capacity BTUH @ 90°F Ambient by SST								
Model	Compressor	+0°F	-5°F	-10°F	-15°F	-20°F	-25°F	-30°F	-35°F	-40°F
BC*0075L@ACZ	ZF25K4E	40,540	36,530	32,690	29,060	25,710	22,680	20,000	17,720	15,920
BC*0100L@BCZ	ZF34K5E	50,640	45,740	41,010	36,500	32,250	28,410	25,010	22,080	19,710
BC*0130L@BCZ	ZF41K5E	64,250	57,740	51,630	45,840	40,450	35,570	31,270	27,590	24,590
BC*0150L@BCZ	ZF49K5E	77,330	69,510	62,070	54,980	48,490	42,590	37,470	33,150	29,820

R-407A/R-407F		Capacity BTUH @ 95°F Ambient by SST								
Model	Compressor	+0°F	-5°F	-10°F	-15°F	-20°F	-25°F	-30°F	-35°F	-40°F
BC*0075L@ACZ	**ZF25K4E**	**39,200**	**35,300**	**31,590**	**28,070**	**24,840**	**21,900**	**19,330**	**17,160**	**15,440**
BC*0100L@BCZ	**ZF34K5E**	**48,630**	**43,920**	**39,370**	**35,040**	**30,950**	**27,260**	**24,000**	**21,170**	**18,910**
BC*0130L@BCZ	**ZF41K5E**	**62,220**	**55,900**	**49,940**	**44,340**	**39,100**	**34,370**	**30,200**	**26,630**	**23,740**
BC*0150L@BCZ	**ZF49K5E**	**74,630**	**67,080**	**59,860**	**52,990**	**46,680**	**40,990**	**36,040**	**31,870**	**28,670**

R-407A/R-407F		Capacity BTUH @ 100°F Ambient by SST								
Model	Compressor	+0°F	-5°F	-10°F	-15°F	-20°F	-25°F	-30°F	-35°F	-40°F
BC*0075L@ACZ	ZF25K4E	37,800	34,040	30,460	27,050	23,920	21,100	18,620	16,540	14,900
BC*0100L@BCZ	ZF34K5E	46,510	42,000	37,630	33,480	29,560	26,020	22,870	20,180	18,020
BC*0130L@BCZ	ZF41K5E	60,100	53,970	48,240	42,750	37,660	33,070	29,030	25,580	22,780
BC*0150L@BCZ	ZF49K5E	71,820	64,520	57,530	50,870	44,770	39,260	34,480	30,490	27,420

R-407A/R-407F		Capacity BTUH @ 110°F Ambient by SST								
Model	Compressor	+0°F	-5°F	-10°F	-15°F	-20°F	-25°F	-30°F	-35°F	-40°F
BC*0075L@ACZ	ZF25K4E	—	—	—	—	—	—	17,060	15,160	13,670
BC*0100L@BCZ	ZF34K5E	—	—	—	—	—	—	—	—	15,980
BC*0130L@BCZ	ZF41K5E	55,540	49,780	44,380	39,260	34,520	30,170	26,380	23,140	20,520
BC*0150L@BCZ	ZF49K5E	—	—	—	—	—	—	30,920	27,210	24,380

Notes:
* H = Outdoor, N = Indoor models only available as model Rev A
@ C = 208-230/3/60, D = 460/3/60, E = 575/3/60

A1 PERFORMANCE DATA – R-407C

Low Temperature Models - Scroll Compressors

Please consult AWEF table on page 27 to confirm DOE compliance per model

R-407C		Capacity BTUH @ 90°F Ambient by SST								
Model	Compressor	+0°F	-5°F	-10°F	-15°F	-20°F	-25°F	-30°F	-35°F	-40°F
BC*0075L@ACZ	ZF25K4E	35,540	31,870	28,370	25,120	22,110	19,440	17,140	15,250	13,840
BC*0100L@BCZ	ZF34K5E	48,670	43,870	39,370	35,140	31,230	27,620	24,370	21,370	18,660
BC*0130L@BCZ	ZF41K5E	63,520	56,880	50,790	45,090	39,900	35,150	30,850	26,960	23,460
BC*0150L@BCZ	ZF49K5E	72,880	65,250	57,970	51,150	44,920	39,330	34,590	30,790	28,020

R-407C		Capacity BTUH @ 95°F Ambient by SST								
Model	Compressor	+0°F	-5°F	-10°F	-15°F	-20°F	-25°F	-30°F	-35°F	-40°F
BC*0075L@ACZ	**ZF25K4E**	**34,560**	**30,970**	**27,550**	**24,390**	**21,450**	**18,850**	**16,640**	**14,830**	**13,500**
BC*0100L@BCZ	**ZF34K5E**	**47,080**	**42,470**	**38,150**	**34,090**	**30,330**	**26,860**	**23,710**	**20,830**	**18,220**
BC*0130L@BCZ	**ZF41K5E**	**61,690**	**55,240**	**49,370**	**43,870**	**38,830**	**34,240**	**30,090**	**26,320**	**22,920**
BC*0150L@BCZ	**ZF49K5E**	**70,750**	**63,280**	**56,180**	**49,510**	**43,430**	**0**	**33,400**	**29,730**	**27,090**

R-407C		Capacity BTUH @ 100°F Ambient by SST								
Model	Compressor	+0°F	-5°F	-10°F	-15°F	-20°F	-25°F	-30°F	-35°F	-40°F
BC*0075L@ACZ	ZF25K4E	33,540	30,040	26,720	23,620	20,770	18,250	16,110	14,380	13,110
BC*0100L@BCZ	ZF34K5E	45,480	41,060	36,910	33,020	29,390	26,060	23,040	20,280	17,760
BC*0130L@BCZ	ZF41K5E	59,790	53,620	47,920	42,610	37,740	33,310	29,300	25,660	22,390
BC*0150L@BCZ	ZF49K5E	68,540	61,220	54,280	47,770	41,800	0	32,090	28,550	26,020

R-407C		Capacity BTUH @ 110°F Ambient by SST								
Model	Compressor	+0°F	-5°F	-10°F	-15°F	-20°F	-25°F	-30°F	-35°F	-40°F
BC*0075L@ACZ	ZF25K4E	31,380	28,050	24,910	21,990	19,300	16,930	14,930	13,350	12,220
BC*0100L@BCZ	ZF34K5E	—	—	—	—	—	—	—	—	16,770
BC*0130L@BCZ	ZF41K5E	55,880	50,170	44,850	39,970	35,450	31,340	27,630	24,260	21,230
BC*0150L@BCZ	ZF49K5E	—	—	—	—	—	—	29,050	25,720	23,420

Notes:
* H = Outdoor, N = Indoor models only available as model Rev A
@ C = 208-230/3/60, D = 460/3/60, E = 575/3/60

A2L UNIT SPECIFICATIONS

Medium & Low Temperature Models - Scroll Compressors

Please consult AWEF table on pages 26 and 27 to confirm DOE compliance per model

Model	Compressor	Refrigerant Line Connections (OD)		Rec. Capacity @90% full (lbs)		Cabinet[h]	Dimensions (In.)			Net Wt.	Sound Data
		Liquid	Suction	Std	Opt		Depth	Width	Height	(lbs.)	dBa[†]
BCH0065M@ACY	YB44KAE	1/2	1 1/8	28	52	C4	36.75	51.75	39.25	574	78
BCH0070M@ACY	YB51KAE	5/8	1 3/8	67	78	C5	36.75	63.75	39.25	800	80
BCH0075M@ACY	YB56KAE	5/8	1 3/8	67	78	C5	36.75	63.75	39.25	813	80
BCH0086M@ACY	YB68KAE	5/8	1 3/8	67	78	C5	36.75	63.75	39.25	818	80
BCH0100M@ACY	YB83KAE	5/8	1 3/8	67	78	C5	36.75	63.75	39.25	908	82
BCH0141M@ACY	YB100KAE	7/8	1 5/8	87	98	C6	41.75	75.125	48.75	1235	82
BCH0075L@ACY	YF19KAE	5/8	1 3/8	67	78	C4.5	36.75	63.75	39.25	813	82
BCH0100L@ACY	YF26KAE	5/8	1 3/8	67	78	C5	36.75	63.75	39.25	908	82
BCH0130L@ACY	YF32KAE	7/8	1 5/8	87	98	C6	41.75	75.125	48.75	1235	84
BCH0150L@ACY	YF38KAE	7/8	1 5/8	87	98	C6	41.75	75.125	48.75	1235	83

Notes:

@ C = 208-230/3/60, D = 460/3/60, E = 575/3/60

[†] Estimated sound pressure values are 10 feet from the unit. For estimating sound pressure from the unit at different distances, deduct the following from the unit values: 20 feet, deduct 6 dBA; for 40 feet, deduct 12 dBA; for 80 feet, deduct 18 dBA. This data is typical of "free field" conditions for horizontal air cooled condensing units at the outlet of the discharge air. The actual sound measurements may vary depending on the condensing unit installation. Factors such as reflecting walls, background noise and mounting conditions may have a significant influence on this data.

A1 UNIT SPECIFICATIONS

Medium & Low Temperature Models - Scroll Compressors

Please consult AWEF table on pages 26 and 27 to confirm DOE compliance per model

Model	Compressor	Refrigerant Line Connections (OD)		Rec. Capacity @90% full (lbs)		Cabinet[h]	Dimensions (In.)			Net Wt.	Sound Data
		Liquid	Suction	Std	Opt		Depth	Width	Height	(lbs.)	dBa[†]
BC*0065M@ACZ	ZB48KCE	1/2	1 1/8	28	52	C4	36.75	51.75	39.25	574	78
BC*0070M@ACZ	ZB58K5E	5/8	1 3/8	67	78	C5	36.75	63.75	39.25	800	80
BC*0075M@ACZ	ZB66K5E	5/8	1 3/8	67	78	C5	36.75	63.75	39.25	813	80
BC*0086M@ACZ	ZB76K5E	5/8	1 3/8	67	78	C5	36.75	63.75	39.25	818	80
BC*0100M@ACZ	ZB95K5E	5/8	1 3/8	67	78	C5	36.75	63.75	39.25	908	82
BC*0141M@ACZ	ZB114K5E	7/8	1 5/8	87	98	C6	41.75	75.125	48.75	1,235	82
BC*0075L@ACZ	ZF25K4E	1/2	1 1/8	28	52	C4	36.75	51.75	39.25	671	82
BC*0100L@BCZ	ZF34K5E	1/2	1 1/8	28	52	C4	36.75	51.75	39.25	671	82
BC*0130L@BCZ	ZF41K5E	5/8	1 3/8	67	78	C5	36.75	63.75	39.25	910	84
BC*0150L@BCZ	ZF49K5E	5/8	1 3/8	67	78	C5	36.75	63.75	39.25	891	83

Notes:

* H = Outdoor, N = Indoor models only available as model Rev A

@ C = 208-230/3/60, D = 460/3/60, E = 575/3/60

[†] Estimated sound pressure values are 10 feet from the unit. For estimating sound pressure from the unit at different distances, deduct the following from the unit values: 20 feet, deduct 6 dBA; for 40 feet, deduct 12 dBA; for 80 feet, deduct 18 dBA. This data is typical of "free field" conditions for horizontal air cooled condensing units at the outlet of the discharge air. The actual sound measurements may vary depending on the condensing unit installation. Factors such as reflecting walls, background noise and mounting conditions may have a significant influence on this data.

A2L ELECTRICAL DATA

Medium Temperature Models - Scroll Compressors

Please consult AWEF table on page 26 to confirm DOE compliance per model

Model	Compressor	Power†	Compressor		Condenser		intelliGen™/ Beacon II		Remote Loads- Low Amps				Remote Loads- High Amps			
			RLA[c]	LRA	No. Fans	FLA (ea)	MCA	MOPD	Evap. Fan Amps	Defrost Htrs. Amps‡	Electric Defrost MCA	Electric Defrost MOPD	Evap. Fan Amps	Defrost Htrs. Amps‡	Electric Defrost MCA	Electric Defrost MOPD
BCH0065MDACY	YB44KAE-TFD	460/3/60	12.2	100.0	1	1.2	20.0	25.0	—	—	—	—	8	20 (1)	25.0	35
BCH0065MEACY	YB44KAE-TFE	575/3/60	9.0	78.0	1	0.8	15.0	20.0	—	—	—	—	6.4	16 (1)	20.0	25
BCH0070MCACY	YB51KAE-TFC	208-230/3/60	30.8	195.0	2	2.2	42.9	70.0	—	—	—	—	20	48 (1)	62.9	90
BCH0070MDACY	YB51KAE-TFD	460/3/60	16.0	95.0	2	1.2	22.4	35.0	—	—	—	—	10	25 (1)	32.4	45
BCH0070MEACY	YB51KAE-TFE	575/3/60	12.2	80.0	2	0.8	20.0	25.0	—	—	—	—	8	20 (1)	25.0	35
BCH0075MCACY	YB56KAE-TFC	208-230/3/60	35.3	225.0	2	2.2	48.5	80.0	—	—	—	—	20	48 (1)	68.5	100
BCH0075MDACY	YB56KAE-TFD	460/3/60	15.4	114.0	2	1.2	21.6	35.0	—	—	—	—	10	25 (1)	31.6	45
BCH0075MEACY	YB56KAE-TFE	575/3/60	12.8	80.0	2	0.8	20.0	30.0	—	—	—	—	8	20 (1)	25.6	35
BCH0086MCACY	YB68KAE-TFC	208-230/3/60	38.6	239.0	2	2.2	52.6	90.0	—	—	—	—	20	70 (2)	87.5	110
BCH0086MDACY	YB68KAE-TFD	460/3/60	18.6	125.0	2	1.2	25.6	40.0	—	—	—	—	13	35 (1)	43.8	50
BCH0086MEACY	YB68KAE-TFE	575/3/60	13.1	80.0	2	0.8	20.0	30.0	—	—	—	—	10.4	28 (1)	35.0	40
BCH0100MCACY	YB83KAE-TWC	208-230/3/60	47.4	298.0	2	2.06	63.4	110.0	–	—	—	—	20	70 (2)	87.5	125
BCH0100MDACY	YB83KAE-TFD	460/3/60	21.8	150.0	2	2.06	31.4	50.0	—	—	—	—	13	35 (1)	44.4	60
BCH0100MEACY	YB83KAE-TFE	575/3/60	18.7	123.0	2	2.06	27.4	45.0	—	—	—	—	10.4	28 (1)	37.8	50
BCH0141MCACY	YB-100KAE-TWC	208-230/3/60	56.5	321.0	2	4.4	79.5	125.0	15	70 (2)	94.5	150	20	80 (2)	100.0	150
BCH0141MDACY	YB-100KAE-TFD	460/3/60	24.4	179.0	2	2.2	34.8	50.0	15	40 (1)	50.0	70	15	60 (2)	75.0	80
BCH0141MEACY	YB-100KAE-TFE	575/3/60	18.8	145.0	2	1.7	27.0	45.0	12	32 (1)	40.0	50	12	48 (1)	60.0	60

Notes:

Per UL and NEC, RLA values have been calculated by dividing the Maximum Continuous Current (MCC) by 1.56.

† Unless otherwise noted, model is available for 50 Hz. Consult factory for details.

‡ = Number of defrost heater contactors in parentheses

A1 ELECTRICAL DATA

Medium Temperature Models - Scroll Compressors

Please consult AWEF table on page 26 to confirm DOE compliance per model

Model	Compressor	Power†	Compressor		Condenser		intelliGen™/ Beacon II		Remote Loads- Low Amps				Remote Loads- High Amps			
			RLA[c]	LRA	No. Fans	FLA (ea)	MCA	MOPD	Evap. Fan Amps	Defrost Htrs. Amps‡	Electric Defrost MCA	Electric Defrost MOPD	Evap. Fan Amps	Defrost Htrs. Amps‡	Electric Defrost MCA	Electric Defrost MOPD
BC*0065MCACZ	ZB48KCE-TF5	208-230/3/60	22.8	164.0	1	2.7	31.1	50.0	—	—	—	—	15	40 (1)	50.0	60
BC*0065MDACZ	ZB48KCE-TFD	460/3/60	12.2	100.0	1	1.9	20.0	25.0	—	—	—	—	8	20 (1)	25.2	35
BC*0065MEACZ[1,2]	ZB48KCE-TFE	575/3/60	9.0	78.0	1	1.2	15.0	20.0	—	—	—	—	6.4	16 (1)	20.0	25
BC*0070MCACZ	ZB58K5E-TFC	208-230/3/60	30.8	195.0	2	2.7	43.9	70.0	—	—	—	—	20	48 (1)	63.9	90
BC*0070MDACZ	ZB58K5E-TFD	460/3/60	16.0	95.0	2	1.9	23.8	35.0	—	—	—	—	10	25 (1)	33.8	45
BC*0070MEACZ[1]	ZB58K5E-TFE	575/3/60	12.2	80.0	2	1.2	20.0	25.0	—	—	—	—	8	20 (1)	25.6	35
BC*0075MCACZ	ZB66K5E-TFC	208-230/3/60	35.3	225.0	2	2.7	49.5	80.0	—	—	—	—	20	48 (1)	69.5	100
BC*0075MDACZ	ZB66K5E-TFD	460/3/60	15.4	114.0	2	1.9	23.0	35.0	—	—	—	—	10	25 (1)	33.0	45
BC*0075MEACZ[1]	ZB66K5E-TFE	575/3/60	12.8	80.0	2	1.2	20.0	30.0	—	—	—	—	8	20 (1)	26.4	35
BC*0086MCACZ	ZB76K5E-TFC	208-230/3/60	38.6	239.0	2	2.7	53.6	90.0	—	—	—	—	20	70 (2)	87.5	110
BC*0086MDACZ	ZB76K5E-TFD	460/3/60	18.6	125.0	2	1.9	27.0	45.0	—	—	—	—	13	35 (1)	43.8	50
BC*0086MEACZ[1]	ZB76K5E-TFE	575/3/60	13.1	80.0	2	1.2	20.0	30.0	—	—	—	—	10.4	28 (1)	35.0	40
BC*0100MCACZ	ZB-95K5E-TWC	208-230/3/60	47.4	298.0	2	2.7	64.7	110.0	—	—	—	—	20	70 (2)	87.5	125
BC*0100MDACZ	ZB95K5E-TFD	460/3/60	21.8	150.0	2	1.9	31.0	50.0	—	—	—	—	13	35 (1)	44.0	60
BC*0100MEACZ[1]	ZB95K5E-TFE	575/3/60	18.7	123.0	2	1.2	25.7	40.0	—	—	—	—	10.4	28 (1)	36.1	50
BC*0141MCACZ[3]	ZB-114K5E-TWC	208-230/3/60	56.5	321.0	2	4.4	79.5	125.0	15	70(2)	94.5	150	20	80 (2)	100	150
BC*0141MDACZ[3]	ZB114K5E-TFD	460/3/60	24.4	179.0	2	2.2	34.8	50.0	15	40(1)	50.0	70	15	60 (2)	75.0	80
BC*0141MEACZ[1]	ZB-114K5E-TWE	575/3/60	20.1	132.0	2	1.8	28.8	45.0	12	32(1)	40.8	60	12	48 (1)	60.0	60

Notes:

* H = Outdoor, N = Indoor

Per UL and NEC, RLA values have been calculated by dividing the Maximum Continuous Current (MCC) by 1.56.

† Unless otherwise noted, model is available for 50 Hz. Consult factory for details.

‡ = Number of defrost heater contactors in parentheses

[1] R407F not available in 575/3/60.

[2] R407C not available in 575/3/60.

[3] R407C not available in 208-230/3/60 or 460/3/60.

A2L ELECTRICAL DATA

Low Temperature Models - Scroll Compressors

Please consult AWEF table on page 27 to confirm DOE compliance per model

Model	Compressor	Power†	Compressor		Condenser		intelliGen™/ Beacon II		Remote Loads- Low Amps				Remote Loads- High Amps			
			RLA[c]	LRA	No. Fans	FLA (ea)	MCA	MOPD	Evap. Fan Amps	Defrost Htrs. Amps	Electric Defrost MCA	Electric Defrost MOPD	Evap. Fan Amps	Defrost Htrs. Amps‡	Electric Defrost MCA	Electric Defrost MOPD
BCH0075LCACY	YF19KAE-TF5	208-230/3/60	24.0	224.0	1	2.06	32.0	50.0	—	—	—	—	20	60 (2)	75.0	80
BCH0075LDACY	YF19KAE-TFD	460/3/60	10.6	99.0	1	2.06	20.0	25.0	—	—	—	—	10	30 (1)	37.5	40
BCH0075LEACY	YF19KAE-TFE	575/3/60	8.1	82.4	1	2.06	15.0	20.0	—	—	—	—	8	24 (1)	30.0	30
BCH0100LCACY	YF26KAE-TFC	208-230/3/60	33.3	239.0	2	2.06	45.8	70.0	—	—	—	—	20	60 (2)	75.0	90
BCH0100LDACY	YF26KAE-TFD	460/3/60	16.0	125.0	2	2.06	24.2	40.0	—	—	—	—	10	30 (1)	37.5	50
BCH0100LEACY	YF26KAE-TFE	575/3/60	12.8	100.0	2	2.06	20.1	30.0	—	—	—	—	8	24 (1)	30.0	40
BCH0130LCACY	YF32KAE-TFC	208-230/3/60	37.8	248.0	2	3.2	53.7	90.0	—	—	—	—	20	70 (2)	87.5	110
BCH0130LDACY	YF32KAE-TFD	460/3/60	17.3	125.0	2	0.72	23.1	40.0	—	—	—	—	13	35 (1)	43.8	50
BCH0130LEACY	YF32KAE-TFE	575/3/60	14.0	100.0	2	3.2	23.9	35.0	—	—	—	—	10.4	28 (1)	35.0	45
BCH0150LCACY	YF38KAE-TFC	208-230/3/60	45.5	338.7	2	3.2	63.3	100.0	—	—	—	—	20	70 (2)	87.5	125
BCH0150LDACY	YF38KAE-TFD	460/3/60	18.1	139.0	2	0.72	24.1	40.0	—	—	—	—	13	35 (1)	43.8	50
BCH0150LEACY	YF38KAE-TFE	575/3/60	16.3	123.0	2	3.2	26.8	40.0	–	—	—	—	10.4	28 (1)	37.2	50
BCH0100MCACY	YB-83KAE-TWC	208-230/3/60	47.4	298.0	2	2.06	63.4	110.0	—	—	—	—	20	70 (2)	87.5	125
BCH0100MDACY	YB83KAE-TFD	460/3/60	21.8	150.0	2	2.06	31.4	50.0	—	—	—	—	13	35 (1)	44.4	60
BCH0100MEACY	YB83KAE-TFE	575/3/60	18.7	123.0	2	2.06	27.4	45.0	—	—	—	—	10.4	28 (1)	37.8	50
BCH0141MCACY	YB-100KAE-TWC	208-230/3/60	56.5	321.0	2	4.4	79.5	125.0	15	70 (2)	94.5	150	20	80 (2)	100.0	150
BCH0141MDACY	YB-100KAE-TFD	460/3/60	24.4	179.0	2	2.2	34.8	50.0	15	40 (1)	50.0	70	15	60 (2)	75.0	80
BCH0141MEACY	YB-100KAE-TFE	575/3/60	18.8	145.0	2	1.7	27.0	45.0	12	32 (1)	40.0	50	12	48 (1)	60.0	60

Notes:

Per UL and NEC, RLA values have been calculated by dividing the Maximum Continuous Current (MCC) by 1.56.

† Unless otherwise noted, model is available for 50 Hz. Consult factory for details.

‡ = Number of defrost heater contactors in parentheses

A1 ELECTRICAL DATA

Low Temperature Models - Scroll Compressors

Please consult AWEF table on page 27 to confirm DOE compliance per model

Model	Compressor	Power†	Compressor		Condenser		intelliGen™/ Beacon II		Remote Loads- Low Amps				Remote Loads- High Amps			
			RLA[c]	LRA	No. Fans	FLA (ea)	MCA	MOPD	Evap. Fan Amps	Defrost Htrs. Amps	Electric Defrost MCA	Electric Defrost MOPD	Evap. Fan Amps	Defrost Htrs. Amps‡	Electric Defrost MCA	Electric Defrost MOPD
BC*0075LCACZ	ZF25K4E-TF5	208-230/3/60	24.0	224.0	1	2.7	32.7	50.0	—	—	—	—	20	60 (2)	75.0	80
BC*0075LDACZ	ZF25K4E-TFD	460/3/60	10.6	99.0	1	1.9	20.0	25.0	—	—	—	—	10	30 (1)	37.5	40
BC*0075LEACZ	ZF25K4E-TFE	575/3/60	8.1	82.4	1	1.2	15.0	15.0	—	—	—	—	8	24 (1)	30.0	30
BC*0100LCBCZ[3]	ZF34K5E-TFC	208-230/3/60	33.3	239.0	1	2.7	44.4	70.0	—	—	—	—	20	60 (2)	75.0	90
BC*0100LDBCZ	ZF34K5E-TFD	460/3/60	16.0	100.0	1	1.9	21.9	35.0	—	—	—	—	10	30 (1)	37.5	45
BC*0100LEBCZ[1]	ZF34K5E-TFE	575/3/60	12.8	100.0	1	1.2	20.0	30.0	—	—	—	—	8	24 (1)	30.0	35
BC*0130LCBCZ	ZF41K5E-TFC	208-230/3/60	37.8	248.0	2	2.7	52.7	90.0	—	—	—	—	20	70 (2)	87.5	110
BC*0130LDBCZ	ZF41K5E-TFD	460/3/60	17.3	125.0	2	1.9	25.4	40.0	—	—	—	—	13	35 (1)	43.8	50
BC*0130LEBCZ	ZF41K5E-TFE	575/3/60	14.0	100.0	2	1.2	20.0	30.0	—	—	—	—	10.4	28 (1)	35.0	40
BC*0150LCBCZ[1]	ZF49K5E-TFC	208-230/3/60	45.5	338.7	2	2.7	62.3	100.0	—	—	—	—	20	70 (2)	87.5	125
BC*0150LDBCZ	ZF49K5E-TFD	460/3/60	18.1	139.0	2	1.9	26.5	40.0	—	—	—	—	13	35 (1)	43.8	50
BC*0150LEBCZ[1]	ZF49K5E-TFE	575/3/60	16.3	123.0	2	1.2	22.8	35.0	–	—	—	—	10.4	28 (1)	35.0	45

Notes:
* H = Outdoor, N = Indoor models only available as model Rev A
Per UL and NEC, RLA values have been calculated by dividing the Maximum Continuous Current (MCC) by 1.56.
† Unless otherwise noted, model is available for 50 Hz. Consult factory for details.
‡ = Number of defrost heater contactors in parentheses
[1] R407F not available in 575/3/60.
[2] R407C not available in 575/3/60.
[3] R407C not available in 208-230/3/60 or 460/3/60.

AWEF DATA – MEDIUM TEMPERATURE

Scroll Compressor Models - Indoor/Outdoor

If model has a numerical value in the table below, the following statement applies:
This refrigeration system is designed and certified for use in walk-in cooler applications.

Model	Indoor					
	R-404A/R-507A	R-448A	R-449A	R-407A	R-407C	R-407F
BC*0065MCACZ	—	5.61	5.61	5.61	X	5.61
BC*0065MDACZ	—	5.61	5.61	5.61	X	5.61
BC*0065MEACZ	—	5.61	5.61	5.61	X	5.61
BC*0070MCACZ	5.61	5.61	5.61	—	X	5.61
BC*0070MDACZ	5.61	5.61	5.61	—	X	5.61
BC*0070MEACZ	5.61	5.61	5.61	—	X	5.61
BC*0075MCACZ	5.61	5.61	5.61	5.61	X	5.61
BC*0075MDACZ	5.61	5.61	5.61	5.61	X	5.61
BC*0075MEACZ	5.61	5.61	5.61	5.61	X	5.61
BC*0086MCACZ	—	5.61	5.61	—	5.61	5.61
BC*0086MDACZ	—	5.61	5.61	—	5.61	5.61
BC*0086MEACZ	—	5.61	5.61	—	5.61	5.61
BC*0100MCACZ	—	—	—	—	—	—
BC*0100MDACZ	—	—	—	—	—	—
BC*0100MEACZ	—	—	—	—	—	—
BC*0141MCACZ	—	—	—	—	5.61	—
BC*0141MDACZ	—	—	—	—	5.61	—
BC*0141MEACZ	—	—	—	—	5.61	—

Model	Outdoor								
	R-404A/R-507A	R-448A	R-449A	R-407A	R-407C	R-407F	R-454A	R-454C	R-455A
BC*0065MCAC#	7.60	7.60	7.60	7.60			7.60	7.60	7.60
BC*0065MDAC#	7.60	7.60	7.60	7.60			7.60	7.60	7.60
BC*0065MEAC#	7.60	7.60	7.60	7.60			7.60	7.60	7.60
BC*0070MCAC#	7.60	7.60	7.60	7.60			7.60	7.60	7.60
BC*0070MDAC#	7.60	7.60	7.60	7.60			7.60	7.60	7.60
BC*0070MEAC#	7.60	7.60	7.60	7.60			7.60	7.60	7.60
BC*0075MCAC#	7.60	7.60	7.60	7.60			7.60	7.60	7.60
BC*0075MDAC#	7.60	7.60	7.60	7.60			7.60	7.60	7.60
BC*0075MEAC#	7.60	7.60	7.60	7.60			7.60	7.60	7.60
BC*0086MCAC#	7.60	7.60	7.60	7.60			7.60	7.60	7.60
BC*0086MDAC#	7.60	7.60	7.60	7.60			7.60	7.60	7.60
BC*0086MEAC#	7.60	7.60	7.60	7.60			7.60	7.60	7.60
BC*0100MCAC#	7.60	7.60	7.60	7.60			7.60	7.60	7.60
BC*0100MDAC#	7.60	7.60	7.60	7.60			7.60	7.60	7.60
BC*0100MEAC#	7.60	7.60	7.60	7.60			7.60	7.60	7.60
BC*0141MCAC#	7.60	7.60	7.60	7.60			7.60	7.60	7.60
BC*0141MDAC#	7.60	7.60	7.60	7.60			7.60	7.60	7.60
BC*0141MEAC#	7.60	7.60	7.60	7.60			7.60	7.60	7.60

Notes:
*H = Outdoor, N = Indoor
X = model not suitable for this refrigerant
— = model is not DOE AWEF compliant
If model has a numerical value in the table, the following statement applies. "This refrigeration system is designed and certified for use in walk-in cooler applications."
= Z for A1 Refrigerants, Y for A2L Refrigerants

AWEF DATA – LOW TEMPERATURE

Scroll Compressor Models - Indoor/Outdoor

If model has a numerical value in the table below, the following statement applies:
This refrigeration system is designed and certified for use in walk-in freezer applications.

Model	Indoor					
	R-404A/R-507A	R-448A	R-449A	R-407A	R-407C	R-407F
BC*0075LCACZ	2.40	—	—	—	—	—
BC*0075LDACZ	2.40	—	—	—	—	—
BC*0075LEACZ	—	—	—	—	—	—
BC*0100LCBCZ	—	—	—	—	—	—
BC*0100LDBCZ	—	—	—	—	—	—
BC*0100LEBCZ	—	—	—	—	—	—
BC*0130LCBCZ	2.40	2.40	2.40	—	—	—
BC*0130LDBCZ	2.40	2.40	2.40	—	—	—
BC*0130LEBCZ	—	2.40	2.40	—	—	—
BC*0150LCBCZ	—	—	2.40	—	—	—
BC*0150LDBCZ	—	—	2.40	—	—	—
BC*0150LEBCZ	—	—	—	—	—	—

Model	Outdoor								
	R-404A/R-507A	R-448A	R-449A	R-407A	R-407C	R-407F	R-454A	R-454C	R-455A
BC*0075LCAC#	3.15	3.15	3.15	3.15	3.15	3.15	3.15	3.15	3.15
BC*0075LDAC#	3.15	3.15	3.15	3.15	3.15	3.15	3.15	3.15	3.15
BC*0075LEAC#	3.15	3.15	—	—	3.15	3.15	3.15	3.15	3.15
BC*0100LCBC#	3.15	3.15	3.15	—	—	3.15	3.15	3.15	3.15
BC*0100LDBC#	3.15	3.15	3.15	—	—	3.15	3.15	3.15	3.15
BC*0100LEBC#	3.15	3.15	3.15	—	—	3.15	3.15	3.15	3.15
BC*0130LCBC#	3.15	3.15	3.15	—	3.15	3.15	3.15	3.15	3.15
BC*0130LDBC#	3.15	3.15	3.15	—	3.15	3.15	3.15	3.15	3.15
BC*0130LEBC#	3.15	3.15	3.15	—	—	3.15	-	-	-
BC*0150LCBC#	3.15	3.15	3.15	—	—	3.15	3.15	3.15	3.15
BC*0150LDBC#	3.15	3.15	3.15	—	—	3.15	3.15	3.15	3.15
BC*0150LEBC#	3.15	3.15	3.15	—	—	3.15	-	-	-

Notes:
*H = Outdoor, N = Indoor
X = model not suitable for this refrigerant
— = model is not DOE AWEF compliant
If model has a numerical value in the table, the following statement applies. "This refrigeration system is designed and certified for use in walk-in cooler applications."
= Z for A1 Refrigerants, Y for A2L Refrigerants

A2L PERFORMANCE DATA – R-454A

Medium Temperature Models - Discus™ Compressors

Please consult AWEF table on page 62 and 63 to confirm DOE compliance per model

R-454A		Capacity BTUH @ 90°F Ambient by SST									
Model	Compressor	+40°F	+35°F	+30°F	+25°F	+20°F	+15°F	+10°F	+5°F	+0°F	-10°F
BCH0050M^ACE	2YC3R51KE	63,960	58,380	52,980	48,000	43,280	38,860	34,690	30,770	27,090	20,300
BCH0051M^ACE	2YD3R59KE	71,410	65,460	59,700	54,170	49,040	44,180	39,550	35,190	31,070	23,500
BCH0075M^ACE	2YL3R73KE	85,590	78,740	72,030	65,540	59,470	53,700	48,200	43,020	38,150	29,280
BCH0076M^ACE	2YA3R82KE	102,980	94,150	85,560	77,560	69,970	62,870	56,180	49,940	44,130	33,670
BCH0080M^ACE	3YA3R99KE	123,080	112,610	102,510	93,080	84,160	75,800	67,970	60,550	53,640	41,020
BCH0100M^ACE	3YB3R11ME	139,670	128,160	117,170	106,670	96,650	87,350	78,540	70,240	62,410	48,030
BCH0120M^ACE	3YF3R14ME	158,460	145,640	134,080	122,500	111,540	101,180	91,230	81,950	73,130	56,740
BCH0150M^ACE	3YS3R16ME	189,150	173,400	157,980	143,780	130,270	117,560	105,550	94,290	83,720	64,410

RR-454A		Capacity BTUH @ 95°F Ambient by SST									
Model	Compressor	+40°F	+35°F	+30°F	+25°F	+20°F	+15°F	+10°F	+5°F	+0°F	-10°F
BCH0050M^ACE	**2YC3R51KE**	**61,310**	**55,970**	**50,880**	**46,030**	**41,520**	**37,310**	**33,290**	**29,550**	**26,020**	**19,540**
BCH0051M^ACE	**2YD3R59KE**	**68,400**	**62,670**	**57,220**	**52,010**	**47,020**	**42,380**	**37,960**	**33,780**	**29,840**	**22,630**
BCH0075M^ACE	**2YL3R73KE**	**82,030**	**75,450**	**68,810**	**62,800**	**57,000**	**51,480**	**46,230**	**41,270**	**36,610**	**28,150**
BCH0076M^ACE	**2YA3R82KE**	**98,980**	**90,480**	**82,210**	**74,520**	**67,230**	**60,390**	**53,960**	**47,960**	**42,370**	**32,360**
BCH0080M^ACE	**3YA3R99KE**	**118,140**	**108,110**	**98,380**	**89,340**	**80,790**	**72,760**	**65,200**	**58,120**	**51,480**	**39,400**
BCH0100M^ACE	**3YB3R11ME**	**133,730**	**122,910**	**112,350**	**102,290**	**92,650**	**83,760**	**75,320**	**67,370**	**59,880**	**46,150**
BCH0120M^ACE	**3YF3R14ME**	**151,020**	**139,390**	**128,220**	**117,330**	**106,820**	**96,910**	**87,390**	**78,530**	**70,110**	**54,480**
BCH0150M^ACE	**3YS3R16ME**	**181,390**	**166,200**	**151,860**	**137,930**	**125,020**	**112,840**	**101,320**	**90,520**	**80,390**	**61,940**

R-454A		Capacity BTUH @ 100°F Ambient by SST									
Model	Compressor	+40°F	+35°F	+30°F	+25°F	+20°F	+15°F	+10°F	+5°F	+0°F	-10°F
BCH0050M^ACE	2YC3R51KE	58,650	53,550	48,620	44,070	39,750	35,710	31,910	28,330	24,990	18,820
BCH0051M^ACE	2YD3R59KE	65,340	59,910	54,720	49,680	45,010	40,580	36,360	32,390	28,630	21,770
BCH0075M^ACE	2YL3R73KE	78,210	72,100	65,960	60,070	54,550	49,280	44,270	39,540	35,090	27,050
BCH0076M^ACE	2YA3R82KE	94,900	86,720	78,820	71,450	64,460	57,900	51,730	45,980	40,620	31,060
BCH0080M^ACE	3YA3R99KE	113,150	103,320	94,250	85,590	77,390	69,700	62,450	55,670	49,310	37,770
BCH0100M^ACE	3YB3R11ME	127,890	117,540	107,440	97,850	88,660	80,160	72,090	64,500	57,340	44,240
BCH0120M^ACE	3YF3R14ME	-	133,040	122,450	112,050	102,040	92,600	83,540	75,110	67,100	52,220
BCH0150M^ACE	3YS3R16ME	173,510	159,100	145,320	132,180	119,600	107,990	96,990	86,680	77,000	59,430

Notes:

^ C = 208-230/3/60, D = 460/3/60, E = 575/3/60

A2L PERFORMANCE DATA – R-454A

Medium Temperature Models - Discus™ Compressors

Please consult AWEF table on page 62 and 63 to confirm DOE compliance per model

R-454A		Capacity BTUH @ 110°F Ambient by SST									
Model	Compressor	+40°F	+35°F	+30°F	+25°F	+20°F	+15°F	+10°F	+5°F	+0°F	-10°F
BCH0050M^ACE	2YC3R51KE	53,250	48,610	44,190	40,080	36,200	32,550	29,130	25,950	22,950	17,460
BCH0051M^ACE	2YD3R59KE	-	54,350	49,680	45,210	40,930	36,950	33,170	29,600	26,240	20,130
BCH0075M^ACE	2YL3R73KE	-	-	-	54,590	49,620	44,870	40,350	36,090	32,100	24,920
BCH0076M^ACE	2YA3R82KE	86,630	79,220	72,030	65,290	58,890	52,900	47,260	42,010	37,180	28,520
BCH0080M^ACE	3YA3R99KE	102,890	94,250	85,740	77,880	70,420	63,460	56,820	50,680	44,950	34,510
BCH0100M^ACE	3YB3R11ME	-	-	97,440	88,810	80,460	72,790	65,490	58,650	52,190	40,410
BCH0120M^ACE	3YF3R14ME	-	-	-	-	92,240	83,780	75,640	68,130	60,950	47,630
BCH0150M^ACE	3YS3R16ME	-	-	131,930	119,940	108,790	98,260	88,300	78,950	70,200	54,370

Notes:

^ C = 208-230/3/60, D = 460/3/60, E = 575/3/60

A2L PERFORMANCE DATA – R-454C

Medium Temperature Models - Discus™ Compressors

Please consult AWEF table on page 62 and 63 to confirm DOE compliance per model

R-454C		Capacity BTUH @ 90°F Ambient by SST									
Model	Compressor	+40°F	+35°F	+30°F	+25°F	+20°F	+15°F	+10°F	+5°F	+0°F	-10°F
BCH0050M^ACE	2YC3R51KE	55,050	50,050	45,400	40,910	36,720	32,830	29,170	25,800	22,640	16,930
BCH0051M^ACE	2YD3R59KE	61,830	56,370	51,210	46,300	41,760	37,460	33,430	29,640	26,090	19,460
BCH0075M^ACE	2YL3R73KE	74,700	68,320	62,220	56,460	51,000	45,870	41,000	36,430	32,120	24,020
BCH0076M^ACE	2YA3R82KE	88,510	80,530	73,060	65,970	59,300	53,110	47,340	41,940	36,930	27,660
BCH0080M^ACE	3YA3R99KE	106,120	96,860	87,860	79,370	71,390	63,980	57,050	50,580	44,610	33,830
BCH0100M^ACE	3YB3R11ME	120,980	110,540	100,540	91,180	82,370	74,050	66,260	58,930	52,140	39,730
BCH0120M^ACE	3YF3R14ME	139,000	127,550	116,490	105,870	95,900	86,490	77,710	69,370	61,580	47,470
BCH0150M^ACE	3YS3R16ME	164,450	150,080	136,320	123,490	111,200	99,790	89,150	79,220	70,060	53,680

RR-454C		Capacity BTUH @ 95°F Ambient by SST									
Model	Compressor	+40°F	+35°F	+30°F	+25°F	+20°F	+15°F	+10°F	+5°F	+0°F	-10°F
BCH0050M^ACE	**2YC3R51KE**	**52,800**	**48,000**	**43,520**	**39,220**	**35,200**	**31,470**	**27,960**	**24,740**	**21,720**	**16,290**
BCH0051M^ACE	**2YD3R59KE**	**59,260**	**54,040**	**49,080**	**44,390**	**40,030**	**35,920**	**32,040**	**28,440**	**25,040**	**18,690**
BCH0075M^ACE	**2YL3R73KE**	**71,590**	**65,500**	**59,770**	**54,150**	**48,920**	**43,990**	**39,330**	**34,950**	**30,820**	**23,070**
BCH0076M^ACE	**2YA3R82KE**	**85,070**	**77,520**	**70,220**	**63,390**	**56,960**	**51,030**	**45,450**	**40,290**	**35,440**	**26,550**
BCH0080M^ACE	**3YA3R99KE**	**101,990**	**92,890**	**84,390**	**76,210**	**68,530**	**61,390**	**54,740**	**48,500**	**42,780**	**32,470**
BCH0100M^ACE	**3YB3R11ME**	**116,100**	**106,060**	**96,470**	**87,460**	**79,010**	**71,010**	**63,540**	**56,570**	**50,010**	**38,140**
BCH0120M^ACE	**3YF3R14ME**	**133,190**	**122,210**	**111,600**	**101,450**	**91,810**	**82,860**	**74,450**	**66,460**	**59,020**	**45,580**
BCH0150M^ACE	**3YS3R16ME**	**157,970**	**144,160**	**130,930**	**118,390**	**106,740**	**95,770**	**85,540**	**76,040**	**67,230**	**51,570**

R-454C		Capacity BTUH @ 100°F Ambient by SST									
Model	Compressor	+40°F	+35°F	+30°F	+25°F	+20°F	+15°F	+10°F	+5°F	+0°F	-10°F
BCH0050M^ACE	2YC3R51KE	50,510	45,930	41,630	37,510	33,630	30,090	26,760	23,680	20,820	15,670
BCH0051M^ACE	2YD3R59KE	56,670	51,700	46,930	42,530	38,310	34,380	30,690	27,240	23,980	17,960
BCH0075M^ACE	2YL3R73KE	68,490	62,680	57,190	51,830	46,830	42,120	37,630	33,500	29,540	22,150
BCH0076M^ACE	2YA3R82KE	81,660	74,270	67,360	60,770	54,580	48,900	43,560	38,600	33,960	25,470
BCH0080M^ACE	3YA3R99KE	97,800	89,070	80,890	73,020	65,640	58,750	52,370	46,430	40,950	31,130
BCH0100M^ACE	3YB3R11ME	111,150	101,540	92,370	83,850	75,610	67,950	60,800	54,110	47,860	36,560
BCH0120M^ACE	3YF3R14ME	127,280	116,780	106,650	96,990	87,760	79,310	71,150	63,530	56,440	43,700
BCH0150M^ACE	3YS3R16ME	151,370	138,120	125,430	113,520	102,230	91,700	81,890	72,810	64,370	49,460

Notes:

^ C = 208-230/3/60, D = 460/3/60, E = 575/3/60

A2L PERFORMANCE DATA – R-454C

Medium Temperature Models - Discus™ Compressors

Please consult AWEF table on page 62 and 63 to confirm DOE compliance per model

R-454C		Capacity BTUH @ 110°F Ambient by SST									
Model	Compressor	+40°F	+35°F	+30°F	+25°F	+20°F	+15°F	+10°F	+5°F	+0°F	-10°F
BCH0050M^ACE	2YC3R51KE	45,880	41,800	37,820	34,080	30,610	27,360	24,360	21,590	19,060	14,510
BCH0051M^ACE	2YD3R59KE	51,440	47,060	42,740	38,670	34,850	31,290	27,990	24,880	21,960	16,580
BCH0075M^ACE	2YL3R73KE	-	56,970	52,040	47,200	42,650	38,390	34,350	30,630	27,030	20,400
BCH0076M^ACE	2YA3R82KE	74,700	68,050	61,610	55,560	49,930	44,690	39,800	35,290	31,060	23,370
BCH0080M^ACE	3YA3R99KE	89,330	81,460	73,800	66,590	59,750	53,570	47,690	42,280	37,320	28,490
BCH0100M^ACE	3YB3R11ME	-	92,380	84,040	76,190	68,730	61,750	55,210	49,180	43,540	33,390
BCH0120M^ACE	3YF3R14ME	-	-	-	87,910	79,570	71,700	64,460	57,600	51,230	39,890
BCH0150M^ACE	3YS3R16ME	-	125,820	114,190	103,380	93,050	83,440	74,470	66,200	58,610	45,240

Notes:

^ C = 208-230/3/60, D = 460/3/60, E = 575/3/60

A2L PERFORMANCE DATA – R-455A

Medium Temperature Models - Discus™ Compressors

Please consult AWEF table on page 62 and 63 to confirm DOE compliance per model

R-455A		Capacity BTUH @ 90°F Ambient by SST									
Model	Compressor	+40°F	+35°F	+30°F	+25°F	+20°F	+15°F	+10°F	+5°F	+0°F	-10°F
BCH0050M^ACE	2YC3R51KE	55,050	50,050	45,400	40,910	36,720	32,830	29,170	25,800	22,640	16,930
BCH0051M^ACE	2YD3R59KE	61,830	56,370	51,210	46,300	41,760	37,460	33,430	29,640	26,090	19,460
BCH0075M^ACE	2YL3R73KE	74,700	68,320	62,220	56,460	51,000	45,870	41,000	36,430	32,120	24,020
BCH0076M^ACE	2YA3R82KE	88,510	80,530	73,060	65,970	59,300	53,110	47,340	41,940	36,930	27,660
BCH0080M^ACE	3YA3R99KE	106,120	96,860	87,860	79,370	71,390	63,980	57,050	50,580	44,610	33,830
BCH0100M^ACE	3YB3R11ME	120,980	110,540	100,540	91,180	82,370	74,050	66,260	58,930	52,140	39,730
BCH0120M^ACE	3YF3R14ME	139,000	127,550	116,490	105,870	95,900	86,490	77,710	69,370	61,580	47,470
BCH0150M^ACE	3YS3R16ME	164,450	150,080	136,320	123,490	111,200	99,790	89,150	79,220	70,060	53,680

RR-455A		Capacity BTUH @ 95°F Ambient by SST									
Model	Compressor	+40°F	+35°F	+30°F	+25°F	+20°F	+15°F	+10°F	+5°F	+0°F	-10°F
BCH0050M^ACE	**2YC3R51KE**	**52,800**	**48,000**	**43,520**	**39,220**	**35,200**	**31,470**	**27,960**	**24,740**	**21,720**	**16,290**
BCH0051M^ACE	**2YD3R59KE**	**59,260**	**54,040**	**49,080**	**44,390**	**40,030**	**35,920**	**32,040**	**28,440**	**25,040**	**18,690**
BCH0075M^ACE	**2YL3R73KE**	**71,590**	**65,500**	**59,770**	**54,150**	**48,920**	**43,990**	**39,330**	**34,950**	**30,820**	**23,070**
BCH0076M^ACE	**2YA3R82KE**	**85,070**	**77,520**	**70,220**	**63,390**	**56,960**	**51,030**	**45,450**	**40,290**	**35,440**	**26,550**
BCH0080M^ACE	**3YA3R99KE**	**101,990**	**92,890**	**84,390**	**76,210**	**68,530**	**61,390**	**54,740**	**48,500**	**42,780**	**32,470**
BCH0100M^ACE	**3YB3R11ME**	**116,100**	**106,060**	**96,470**	**87,460**	**79,010**	**71,010**	**63,540**	**56,570**	**50,010**	**38,140**
BCH0120M^ACE	**3YF3R14ME**	**133,190**	**122,210**	**111,600**	**101,450**	**91,810**	**82,860**	**74,450**	**66,460**	**59,020**	**45,580**
BCH0150M^ACE	**3YS3R16ME**	**157,970**	**144,160**	**130,930**	**118,390**	**106,740**	**95,770**	**85,540**	**76,040**	**67,230**	**51,570**

R-455A		Capacity BTUH @ 100°F Ambient by SST									
Model	Compressor	+40°F	+35°F	+30°F	+25°F	+20°F	+15°F	+10°F	+5°F	+0°F	-10°F
BCH0050M^ACE	2YC3R51KE	50,510	45,930	41,630	37,510	33,630	30,090	26,760	23,680	20,820	15,670
BCH0051M^ACE	2YD3R59KE	56,670	51,700	46,930	42,530	38,310	34,380	30,690	27,240	23,980	17,960
BCH0075M^ACE	2YL3R73KE	68,490	62,680	57,190	51,830	46,830	42,120	37,630	33,500	29,540	22,150
BCH0076M^ACE	2YA3R82KE	81,660	74,270	67,360	60,770	54,580	48,900	43,560	38,600	33,960	25,470
BCH0080M^ACE	3YA3R99KE	97,800	89,070	80,890	73,020	65,640	58,750	52,370	46,430	40,950	31,130
BCH0100M^ACE	3YB3R11ME	111,150	101,540	92,370	83,850	75,610	67,950	60,800	54,110	47,860	36,560
BCH0120M^ACE	3YF3R14ME	127,280	116,780	106,650	96,990	87,760	79,310	71,150	63,530	56,440	43,700
BCH0150M^ACE	3YS3R16ME	151,370	138,120	125,430	113,520	102,230	91,700	81,890	72,810	64,370	49,460

Notes:

^ C = 208-230/3/60, D = 460/3/60, E = 575/3/60

A2L PERFORMANCE DATA – R-455A

Medium Temperature Models - Discus™ Compressors

Please consult AWEF table on page 62 and 63 to confirm DOE compliance per model

R-455A		Capacity BTUH @ 110°F Ambient by SST									
Model	Compressor	+40°F	+35°F	+30°F	+25°F	+20°F	+15°F	+10°F	+5°F	+0°F	-10°F
BCH0050M^ACE	2YC3R51KE	45,880	41,800	37,820	34,080	30,610	27,360	24,360	21,590	19,060	14,510
BCH0051M^ACE	2YD3R59KE	51,440	47,060	42,740	38,670	34,850	31,290	27,990	24,880	21,960	16,580
BCH0075M^ACE	2YL3R73KE	-	56,970	52,040	47,200	42,650	38,390	34,350	30,630	27,030	20,400
BCH0076M^ACE	2YA3R82KE	74,700	68,050	61,610	55,560	49,930	44,690	39,800	35,290	31,060	23,370
BCH0080M^ACE	3YA3R99KE	89,330	81,460	73,800	66,590	59,750	53,570	47,690	42,280	37,320	28,490
BCH0100M^ACE	3YB3R11ME	-	92,380	84,040	76,190	68,730	61,750	55,210	49,180	43,540	33,390
BCH0120M^ACE	3YF3R14ME	-	-	-	87,910	79,570	71,700	64,460	57,600	51,230	39,890
BCH0150M^ACE	3YS3R16ME	-	125,820	114,190	103,380	93,050	83,440	74,470	66,200	58,610	45,240

Notes:

^ C = 208-230/3/60, D = 460/3/60, E = 575/3/60

A1 PERFORMANCE DATA – R-404A/R-507A

Medium Temperature Models - Discus™ Compressors

Please consult AWEF table on page 62 and 63 to confirm DOE compliance per model

R-404A/R-507A		Capacity BTUH @ 90°F Ambient by SST									
Model	Compressor	+40°F	+35°F	+30°F	+25°F	+20°F	+15°F	+10°F	+5°F	+0°F	-10°F
BC*0050M@ACD	2DC3R53KE	60,650	55,700	50,840	46,270	41,940	37,750	33,860	30,210	26,820	20,890
BC*0051M@ACD	2DD3R63KE	69,020	64,010	58,800	53,620	48,820	44,230	39,810	35,720	31,930	25,270
BC*0075M@ACD	2DL3R78KE	81,700	75,800	70,110	64,340	58,670	53,440	48,450	43,710	39,290	31,270
BC*0076M@ACD	2DA3R89KE	101,530	93,490	86,120	78,770	71,990	65,420	59,280	53,490	48,110	38,250
BC*0080M@ACD	3DA3R10ME	118,200	109,220	100,350	92,040	84,200	76,540	69,330	62,450	56,100	44,430
BC*0100M@ACD	3DB3R12ME	133,270	124,030	114,660	105,400	96,850	88,670	80,800	73,300	66,170	52,670
BC*0120M@ACD	3DF3R15ME	153,030	142,480	132,770	123,400	113,810	104,640	95,640	87,180	79,020	63,780
BC*0150M@ACD	3DS3R17ME	184,960	171,910	159,010	146,210	134,330	122,900	111,960	101,600	91,680	73,230

R-404A/R-507A		Capacity BTUH @ 95°F Ambient by SST									
Model	Compressor	+40°F	+35°F	+30°F	+25°F	+20°F	+15°F	+10°F	+5°F	+0°F	-10°F
BC*0050M@ACD	**2DC3R53KE**	**57,640**	**52,950**	**48,340**	**44,010**	**39,820**	**35,880**	**32,200**	**28,710**	**25,490**	**19,840**
BC*0051M@ACD	**2DD3R63KE**	**65,520**	**60,810**	**55,880**	**50,970**	**46,440**	**42,160**	**37,960**	**34,010**	**30,410**	**24,120**
BC*0075M@ACD	**2DL3R78KE**	**77,580**	**72,090**	**66,720**	**61,260**	**55,910**	**50,960**	**46,160**	**41,630**	**37,440**	**29,840**
BC*0076M@ACD	**2DA3R89KE**	**96,770**	**89,370**	**82,030**	**75,370**	**68,750**	**62,560**	**56,620**	**51,130**	**45,940**	**36,430**
BC*0080M@ACD	**3DA3R10ME**	**112,800**	**104,340**	**95,970**	**88,100**	**80,650**	**73,250**	**66,450**	**59,950**	**53,870**	**42,630**
BC*0100M@ACD	**3DB3R12ME**	**126,880**	**118,250**	**109,390**	**100,660**	**92,580**	**84,810**	**77,290**	**70,110**	**63,310**	**50,400**
BC*0120M@ACD	**3DF3R15ME**	**145,390**	**135,490**	**126,380**	**117,620**	**108,580**	**99,680**	**91,400**	**83,340**	**75,760**	**61,010**
BC*0150M@ACD	**3DS3R17ME**	**175,390**	**163,700**	**151,600**	**139,560**	**128,330**	**117,540**	**107,330**	**97,310**	**87,870**	**70,230**

R-404A/R-507A		Capacity BTUH @ 100°F Ambient by SST									
Model	Compressor	+40°F	+35°F	+30°F	+25°F	+20°F	+15°F	+10°F	+5°F	+0°F	-10°F
BC*0050M@ACD	2DC3R53KE	54,630	50,080	45,860	41,820	37,840	34,030	30,530	27,230	24,180	18,790
BC*0051M@ACD	2DD3R63KE	62,020	57,590	52,940	48,330	44,050	40,000	36,070	32,350	28,920	22,990
BC*0075M@ACD	2DL3R78KE	73,540	68,370	63,320	58,200	53,140	48,450	44,000	39,720	35,640	28,410
BC*0076M@ACD	2DA3R89KE	92,020	84,780	78,110	71,780	65,490	59,560	53,920	48,730	43,760	34,600
BC*0080M@ACD	3DA3R10ME	107,440	99,240	91,590	84,160	76,970	70,260	63,650	57,450	51,650	40,840
BC*0100M@ACD	3DB3R12ME	120,520	112,460	104,130	95,910	88,260	80,940	73,910	67,110	60,490	48,120
BC*0120M@ACD	3DF3R15ME	—	128,520	119,960	111,790	103,350	95,230	87,180	79,560	72,370	58,310
BC*0150M@ACD	3DS3R17ME	166,390	155,510	144,200	132,840	122,310	112,180	102,500	93,030	84,090	67,200

Notes:
* H = Outdoor, N = Indoor
@ C = 208-230/3/60, D = 460/3/60, E = 575/3/60

A1 PERFORMANCE DATA – R-404A/R-507A

Medium Temperature Models - Discus™ Compressors (cont.)

Please consult AWEF table on page 62 and 63 to confirm DOE compliance per model

R-404A/R-507A		Capacity BTUH @ 110°F Ambient by SST									
Model	Compressor	+40°F	+35°F	+30°F	+25°F	+20°F	+15°F	+10°F	+5°F	+0°F	-10°F
BC*0050M@ACD	2DC3R53KE	48,700	44,710	41,070	37,360	33,760	30,460	27,300	24,350	21,600	16,760
BC*0051M@ACD	2DD3R63KE	—	51,180	47,110	43,050	39,380	35,630	32,230	28,960	25,960	20,770
BC*0075M@ACD	2DL3R78KE	—	—	56,580	52,070	47,590	43,440	39,490	35,650	32,040	25,560
BC*0076M@ACD	2DA3R89KE	82,170	76,160	70,240	64,570	58,920	53,630	48,690	43,930	39,400	30,920
BC*0080M@ACD	3DA3R10ME	96,740	89,570	82,850	76,310	69,970	63,850	57,980	52,460	47,130	37,140
BC*0100M@ACD	3DB3R12ME	—	—	93,580	86,320	79,630	73,250	66,850	60,700	54,780	43,510
BC*0120M@ACD	3DF3R15ME	—	—	—	—	—	85,610	78,700	72,060	65,630	52,960
BC*0150M@ACD	3DS3R17ME	—	—	—	119,440	110,270	101,400	92,860	84,410	76,360	61,200

Notes:
* H = Outdoor, N = Indoor
@ C = 208-230/3/60, D = 460/3/60, E = 575/3/60

A1 PERFORMANCE DATA – R-448A/R-449A

Medium Temperature Models - Discus™ Compressors

Please consult AWEF table on page 62 and 63 to confirm DOE compliance per model

R-448A/R-449A		Capacity BTUH @ 90°F Ambient by SST									
Model	Compressor	+40°F	+35°F	+30°F	+25°F	+20°F	+15°F	+10°F	+5°F	+0°F	-10°F
BC*0050M@ACD	2DC3R53KE	60,640	55,060	49,740	44,780	40,050	35,750	31,770	28,190	24,940	19,460
BC*0051M@ACD	2DD3R63KE	68,070	62,120	56,390	50,940	45,890	41,110	36,750	32,730	29,150	23,280
BC*0075M@ACD	2DL3R78KE	83,020	76,130	69,580	63,380	57,540	52,140	46,930	41,980	37,290	28,290
BC*0076M@ACD	2DA3R89KE	100,200	91,440	83,200	75,180	67,550	60,630	53,980	47,900	42,350	32,640
BC*0080M@ACD	3DA3R10ME	119,190	109,550	100,040	90,900	81,920	73,340	65,310	57,790	50,940	39,130
BC*0100M@ACD	3DB3R12ME	135,650	125,280	115,000	104,920	95,110	85,840	76,820	68,400	60,530	47,080
BC*0120M@ACD	3DF3R15ME	152,510	141,100	129,740	118,290	107,400	96,880	86,760	77,310	68,390	53,050
BC*0150M@ACD	3DS3R17ME	187,720	173,320	158,990	144,930	131,260	118,240	105,600	93,600	82,440	62,440

R-448A/R-449A		Capacity BTUH @ 95°F Ambient by SST									
Model	Compressor	+40°F	+35°F	+30°F	+25°F	+20°F	+15°F	+10°F	+5°F	+0°F	-10°F
BC*0050M@ACD	**2DC3R53KE**	**58,260**	**52,860**	**47,730**	**42,930**	**38,370**	**34,230**	**30,440**	**26,980**	**23,860**	**18,660**
BC*0051M@ACD	**2DD3R63KE**	**65,400**	**59,670**	**54,160**	**48,940**	**44,070**	**39,480**	**35,270**	**31,450**	**28,050**	**22,520**
BC*0075M@ACD	**2DL3R78KE**	**79,850**	**73,270**	**66,980**	**61,030**	**55,400**	**50,180**	**45,140**	**40,390**	**35,780**	**27,010**
BC*0076M@ACD	**2DA3R89KE**	**96,350**	**88,030**	**80,100**	**72,380**	**65,050**	**58,300**	**51,950**	**46,110**	**40,730**	**31,330**
BC*0080M@ACD	**3DA3R10ME**	**114,580**	**105,350**	**96,230**	**87,440**	**78,760**	**70,530**	**62,660**	**55,390**	**48,650**	**36,960**
BC*0100M@ACD	**3DB3R12ME**	**130,570**	**120,350**	**110,520**	**100,830**	**91,390**	**82,430**	**73,680**	**65,470**	**57,790**	**44,550**
BC*0120M@ACD	**3DF3R15ME**	**146,130**	**135,290**	**124,410**	**113,400**	**102,940**	**92,790**	**83,010**	**73,830**	**65,060**	**50,070**
BC*0150M@ACD	**3DS3R17ME**	**180,690**	**166,950**	**153,270**	**139,780**	**126,620**	**114,040**	**101,780**	**90,090**	**79,120**	**59,330**

R-448A/R-449A		Capacity BTUH @ 100°F Ambient by SST									
Model	Compressor	+40°F	+35°F	+30°F	+25°F	+20°F	+15°F	+10°F	+5°F	+0°F	-10°F
BC*0050M@ACD	2DC3R53KE	55,880	50,690	45,740	41,120	36,790	32,740	29,110	25,790	22,820	17,880
BC*0051M@ACD	2DD3R63KE	62,730	57,250	51,950	46,950	42,270	37,850	33,860	30,230	27,000	21,800
BC*0075M@ACD	2DL3R78KE	76,690	70,410	64,380	58,640	53,230	48,200	43,330	38,710	34,250	25,690
BC*0076M@ACD	2DA3R89KE	92,560	84,580	76,980	69,550	62,530	56,010	49,940	44,270	39,080	30,010
BC*0080M@ACD	3DA3R10ME	109,990	101,150	92,390	83,930	75,550	67,580	59,940	52,870	46,250	34,750
BC*0100M@ACD	3DB3R12ME	125,140	115,370	105,930	96,640	87,550	78,920	70,430	62,490	54,910	41,930
BC*0120M@ACD	3DF3R15ME	—	129,470	119,030	108,440	98,390	88,600	79,130	70,220	61,720	—
BC*0150M@ACD	3DS3R17ME	173,650	160,610	147,520	134,620	121,990	109,820	97,920	86,530	75,760	56,150

Notes:
* H = Outdoor, N = Indoor
@ C = 208-230/3/60, D = 460/3/60, E = 575/3/60

A1 PERFORMANCE DATA – R-448A/R-449A

Medium Temperature Models - Discus™ Compressors (cont.)

Please consult AWEF table on page 62 and 63 to confirm DOE compliance per model

R-448A/R-449A		Capacity BTUH @ 110°F Ambient by SST									
Model	Compressor	+40°F	+35°F	+30°F	+25°F	+20°F	+15°F	+10°F	+5°F	+0°F	-10°F
BC*0050M@ACD	2DC3R53KE	51,190	46,410	41,910	37,530	33,560	29,880	26,550	23,530	20,830	16,460
BC*0051M@ACD	2DD3R63KE	—	52,450	47,630	43,120	38,790	34,780	31,160	27,900	25,030	20,530
BC*0075M@ACD	2DL3R78KE	—	—	—	53,880	48,890	44,230	39,670	35,310	31,150	22,980
BC*0076M@ACD	2DA3R89KE	84,890	77,610	70,660	63,860	57,450	51,390	45,810	40,590	35,780	27,350
BC*0080M@ACD	3DA3R10ME	—	92,710	84,670	76,850	69,050	61,520	54,350	47,670	41,350	30,140
BC*0100M@ACD	3DB3R12ME	—	—	—	88,100	79,700	71,680	63,580	56,080	49,060	—
BC*0120M@ACD	3DF3R15ME	—	—	—	—	—	80,110	71,170	62,730	54,560	—
BC*0150M@ACD	3DS3R17ME	—	—	—	124,370	112,860	101,400	90,210	79,460	68,990	—

Notes:
* H = Outdoor, N = Indoor
@ C = 208-230/3/60, D = 460/3/60, E = 575/3/60

A1 PERFORMANCE DATA – R-407A/R-407F

Medium Temperature Models - Discus™ Compressors

Please consult AWEF table on page 62 and 63 to confirm DOE compliance per model

R-407A/R-407F		Capacity BTUH @ 90°F Ambient by SST									
Model	Compressor	+40°F	+35°F	+30°F	+25°F	+20°F	+15°F	+10°F	+5°F	+0°F	-10°F
BC*0050M@ACD	2DC3R53KE	61,510	55,840	50,430	45,430	40,600	36,300	32,310	28,740	25,490	19,970
BC*0051M@ACD	2DD3R63KE	69,070	62,720	56,950	51,480	46,440	41,660	37,280	33,290	29,720	23,830
BC*0075M@ACD	2DL3R78KE	83,660	76,600	69,730	63,420	57,490	52,060	46,880	42,120	37,890	30,440
BC*0076M@ACD	2DA3R89KE	101,470	92,620	84,110	76,210	68,650	61,680	55,100	49,050	43,510	33,610
BC*0080M@ACD	3DA3R10ME	120,960	110,860	101,140	91,870	83,220	74,930	67,240	59,960	53,350	41,340
BC*0100M@ACD	3DB3R12ME	137,510	126,310	115,860	105,810	96,220	87,160	78,670	70,560	62,960	49,410
BC*0120M@ACD	3DF3R15ME	152,510	140,890	129,520	118,480	107,610	97,570	88,020	79,010	70,770	55,990
BC*0150M@ACD	3DS3R17ME	186,520	171,360	157,130	143,430	130,330	117,860	106,210	95,060	84,550	65,380

R-407A/R-407F		Capacity BTUH @ 95°F Ambient by SST									
Model	Compressor	+40°F	+35°F	+30°F	+25°F	+20°F	+15°F	+10°F	+5°F	+0°F	-10°F
BC*0050M@ACD	**2DC3R53KE**	**58,900**	**53,430**	**48,240**	**43,410**	**38,800**	**34,660**	**30,830**	**27,420**	**24,310**	**19,080**
BC*0051M@ACD	**2DD3R63KE**	**66,130**	**60,070**	**54,530**	**49,290**	**44,450**	**39,880**	**35,710**	**31,900**	**28,520**	**22,970**
BC*0075M@ACD	**2DL3R78KE**	**80,100**	**73,380**	**66,840**	**60,820**	**55,160**	**49,900**	**45,070**	**40,580**	**36,600**	**29,660**
BC*0076M@ACD	**2DA3R89KE**	**97,350**	**88,820**	**80,740**	**73,140**	**65,880**	**59,120**	**52,810**	**47,020**	**41,630**	**32,030**
BC*0080M@ACD	**3DA3R10ME**	**116,030**	**106,360**	**97,020**	**88,100**	**79,710**	**71,690**	**64,120**	**57,130**	**50,560**	**38,590**
BC*0100M@ACD	**3DB3R12ME**	**131,700**	**120,950**	**110,950**	**101,290**	**92,050**	**83,230**	**75,020**	**66,980**	**59,550**	**46,050**
BC*0120M@ACD	**3DF3R15ME**	**145,760**	**134,660**	**123,760**	**113,160**	**102,660**	**92,980**	**83,700**	**74,970**	**66,900**	**52,360**
BC*0150M@ACD	**3DS3R17ME**	**178,920**	**164,500**	**150,900**	**137,770**	**125,080**	**113,310**	**101,820**	**90,830**	**80,600**	**61,600**

R-407A/R-407F		Capacity BTUH @ 100°F Ambient by SST									
Model	Compressor	+40°F	+35°F	+30°F	+25°F	+20°F	+15°F	+10°F	+5°F	+0°F	-10°F
BC*0050M@ACD	2DC3R53KE	56,300	51,060	46,060	41,440	37,020	33,040	29,430	26,130	23,180	18,240
BC*0051M@ACD	2DD3R63KE	63,120	57,430	52,140	47,130	42,500	38,130	34,140	30,550	27,360	22,170
BC*0075M@ACD	2DL3R78KE	76,570	69,990	63,960	58,240	52,870	47,940	43,310	39,090	35,320	28,930
BC*0076M@ACD	2DA3R89KE	93,360	85,100	77,490	70,070	63,030	56,590	50,510	44,950	39,750	30,440
BC*0080M@ACD	3DA3R10ME	111,100	101,840	92,870	84,250	76,170	68,280	60,980	54,130	47,660	35,710
BC*0100M@ACD	3DB3R12ME	125,840	115,880	105,960	96,670	87,750	79,230	71,210	63,430	56,130	42,580
BC*0120M@ACD	3DF3R15ME	—	128,380	117,970	107,790	97,920	88,280	79,270	70,790	62,710	48,410
BC*0150M@ACD	3DS3R17ME	171,390	157,600	144,670	132,100	119,900	108,510	97,330	86,650	76,490	57,680

Notes:
* H = Outdoor, N = Indoor
@ C = 208-230/3/60, D = 460/3/60, E = 575/3/60

A1 PERFORMANCE DATA – R-407A/R-407F

Medium Temperature Models - Discus™ Compressors (cont.)

Please consult AWEF table on page 62 and 63 to confirm DOE compliance per model

R-407A/R-407F		Capacity BTUH @ 110°F Ambient by SST									
Model	Compressor	+40°F	+35°F	+30°F	+25°F	+20°F	+15°F	+10°F	+5°F	+0°F	-10°F
BC*0050M@ACD	2DC3R53KE	51,180	46,400	41,910	37,590	33,580	29,930	26,660	23,690	21,040	16,680
BC*0051M@ACD	2DD3R63KE	—	—	47,450	42,920	38,720	34,770	31,210	28,020	25,200	20,730
BC*0075M@ACD	2DL3R78KE	—	—	—	53,190	48,400	44,010	39,930	36,240	33,000	27,670
BC*0076M@ACD	2DA3R89KE	84,940	77,640	70,680	63,890	57,540	51,510	45,940	40,810	35,970	27,250
BC*0080M@ACD	3DA3R10ME	—	92,750	84,500	76,490	68,910	61,610	54,540	47,910	41,500	29,730
BC*0100M@ACD	3DB3R12ME	—	—	—	87,180	78,840	70,860	63,210	55,650	48,710	35,350
BC*0120M@ACD	3DF3R15ME	—	—	—	—	—	78,670	70,190	62,260	54,310	40,220
BC*0150M@ACD	3DS3R17ME	—	—	—	120,450	109,330	98,690	88,120	77,890	68,170	49,410

Notes:
* H = Outdoor, N = Indoor
@ C = 208-230/3/60, D = 460/3/60, E = 575/3/60

A1 PERFORMANCE DATA – R-407C

Medium Temperature Models - Discus™ Compressors

Please consult AWEF table on page 62 and 63 to confirm DOE compliance per model

R-407C		Capacity BTUH @ 90°F Ambient by SST									
Model	Compressor	+40°F	+35°F	+30°F	+25°F	+20°F	+15°F	+10°F	+5°F	+0°F	-10°F
BC*0050M@ACD	2DC3R53KE	57,780	51,970	46,480	41,390	36,630	32,380	28,510	25,040	22,020	17,290
BC*0051M@ACD	2DD3R63KE	65,540	58,940	52,830	47,140	41,950	37,130	32,870	29,080	25,770	20,550
BC*0075M@ACD	2DL3R78KE	79,980	72,320	65,210	58,530	52,340	46,730	41,530	36,880	32,800	26,300
BC*0076M@ACD	2DA3R89KE	95,180	86,060	77,480	69,300	61,730	54,710	48,400	42,670	37,510	29,010
BC*0080M@ACD	3DA3R10ME	111,190	101,710	92,460	83,570	75,140	67,170	59,670	52,760	46,370	35,480
BC*0100M@ACD	3DB3R12ME	128,190	117,670	107,230	97,360	87,910	78,960	70,560	62,630	55,430	42,750
BC*0120M@ACD	3DF3R15ME	144,160	132,710	121,330	110,250	99,550	89,240	79,660	70,740	62,620	48,580
BC*0150M@ACD	3DS3R17ME	172,680	158,620	144,820	131,450	118,640	106,580	95,020	84,170	74,130	56,110

R-407C		Capacity BTUH @ 95°F Ambient by SST									
Model	Compressor	+40°F	+35°F	+30°F	+25°F	+20°F	+15°F	+10°F	+5°F	+0°F	-10°F
BC*0050M@ACD	**2DC3R53KE**	**55,770**	**50,110**	**44,760**	**39,810**	**35,180**	**31,050**	**27,310**	**23,960**	**21,070**	**16,570**
BC*0051M@ACD	**2DD3R63KE**	**63,320**	**56,900**	**50,950**	**45,420**	**40,370**	**35,760**	**31,600**	**27,950**	**24,760**	**19,850**
BC*0075M@ACD	**2DL3R78KE**	**77,360**	**70,060**	**63,040**	**56,560**	**50,560**	**45,120**	**40,090**	**35,660**	**31,800**	**25,690**
BC*0076M@ACD	**2DA3R89KE**	**92,130**	**83,290**	**74,930**	**66,950**	**59,530**	**52,780**	**46,590**	**41,010**	**35,980**	**27,720**
BC*0080M@ACD	**3DA3R10ME**	**107,430**	**98,260**	**89,310**	**80,690**	**72,490**	**64,640**	**57,350**	**50,480**	**44,170**	**33,230**
BC*0100M@ACD	**3DB3R12ME**	**123,800**	**113,640**	**103,530**	**93,950**	**84,750**	**76,020**	**67,780**	**60,000**	**52,740**	**40,000**
BC*0120M@ACD	**3DF3R15ME**	**138,930**	**127,880**	**116,880**	**106,120**	**95,730**	**85,660**	**76,310**	**67,670**	**59,430**	**45,620**
BC*0150M@ACD	**3DS3R17ME**	**166,970**	**153,460**	**140,150**	**127,210**	**114,770**	**103,030**	**91,680**	**80,980**	**71,050**	**52,950**

R-407C		Capacity BTUH @ 100°F Ambient by SST									
Model	Compressor	+40°F	+35°F	+30°F	+25°F	+20°F	+15°F	+10°F	+5°F	+0°F	-10°F
BC*0050M@ACD	2DC3R53KE	53,810	48,310	43,100	38,230	33,780	29,780	26,130	22,930	20,160	15,890
BC*0051M@ACD	2DD3R63KE	61,140	54,910	49,130	43,770	38,850	34,360	30,380	26,870	23,830	19,200
BC*0075M@ACD	2DL3R78KE	74,800	67,600	60,920	54,640	48,830	43,580	38,780	34,510	30,840	25,130
BC*0076M@ACD	2DA3R89KE	89,150	80,550	72,420	64,640	57,420	50,840	44,780	39,370	34,470	26,430
BC*0080M@ACD	3DA3R10ME	103,650	94,810	86,140	77,760	69,750	62,060	54,910	48,090	41,870	30,860
BC*0100M@ACD	3DB3R12ME	119,370	109,550	99,900	90,420	81,450	72,910	64,810	57,140	49,870	37,070
BC*0120M@ACD	3DF3R15ME	133,640	122,960	112,350	101,900	91,760	81,920	72,760	64,240	56,210	42,140
BC*0150M@ACD	3DS3R17ME	161,260	148,230	135,390	122,880	110,790	99,320	88,110	77,580	67,760	49,620

Notes:
* H = Outdoor, N = Indoor
@ C = 208-230/3/60, D = 460/3/60, E = 575/3/60

A1 PERFORMANCE DATA – R-407C

Medium Temperature Models - Discus™ Compressors (cont.)

Please consult AWEF table on page 62 and 63 to confirm DOE compliance per model

R-407C		Capacity BTUH @ 90°F Ambient by SST									
Model	Compressor	+40°F	+35°F	+30°F	+25°F	+20°F	+15°F	+10°F	+5°F	+0°F	-10°F
BC*0050M@ACD	2DC3R53KE	50,020	44,830	39,960	35,380	31,170	27,390	23,980	21,010	18,470	14,660
BC*0051M@ACD	2DD3R63KE	—	51,080	45,650	40,660	35,960	31,800	28,120	24,890	22,130	18,060
BC*0075M@ACD	2DL3R78KE	—	—	—	50,990	45,580	40,690	36,250	32,400	29,120	—
BC*0076M@ACD	2DA3R89KE	83,320	75,210	67,510	60,150	53,300	47,090	41,370	36,170	31,540	23,910
BC*0080M@ACD	3DA3R10ME	96,150	87,860	79,690	71,830	64,070	56,680	49,570	42,970	36,700	25,390
BC*0100M@ACD	3DB3R12ME	—	—	92,030	83,170	74,440	66,340	58,310	50,670	43,640	30,620
BC*0120M@ACD	3DF3R15ME	—	—	—	93,140	83,480	74,210	65,070	56,600	48,830	—
BC*0150M@ACD	3DS3R17ME	—	—	125,700	113,930	102,440	91,450	80,600	70,350	60,380	—

Notes:
* H = Outdoor, N = Indoor
@ C = 208-230/3/60, D = 460/3/60, E = 575/3/60

A2L PERFORMANCE DATA – R-454A

Low Temperature Models - Discus™ Compressors

Please consult AWEF table on page 64 and 65 to confirm DOE compliance per model

R-454A		Capacity BTUH @ 90°F Ambient by SST								
Model	Compressor	+0°F	-5°F	-10°F	-15°F	-20°F	-25°F	-30°F	-35°F	-40°F
BCH0030L^ACE	2YF3F13KE	33,570	29,530	25,830	22,430	19,360	16,610	14,170	12,020	10,150
BCH0040L^ACE	2YL3F15KE	37,050	32,650	28,630	24,900	21,510	18,450	15,730	13,340	11,280
BCH0060L^ACE	2YB3F18KE	42,840	37,960	33,370	29,070	25,130	21,590	18,420	15,630	13,230
BCH0061L^ACE	3YA3F21KE	48,200	42,800	37,710	32,960	28,530	24,550	20,970	17,780	14,980
BCH0075L^ACE	3YB3F24KE	56,590	50,420	44,490	38,990	33,850	29,130	24,860	21,040	17,700
BCH0090L^ACE	3YF3F29KE	73,220	64,760	56,810	49,460	42,710	36,560	31,040	26,080	21,710
BCH0100L^ACE	3YS3F33KE	80,320	71,180	62,610	54,640	47,260	40,510	34,430	28,950	24,110
BCH0120L^ACE	4YBNF40KE	99,930	88,550	77,870	67,870	58,630	50,230	42,650	35,860	29,920
BCH0150L^ACE	4YHNF46KE	110,180	98,270	86,910	76,110	66,030	56,730	48,300	40,780	34,120
BCH0220L^ACE	4YJNF59KE	134,230	119,990	106,370	93,420	81,310	70,120	59,960	50,830	42,820

R-454A		Capacity BTUH @ 95°F Ambient by SST								
Model	Compressor	+0°F	-5°F	-10°F	-15°F	-20°F	-25°F	-30°F	-35°F	-40°F
BCH0030L^ACE	**2YF3F13KE**	**32,270**	**28,370**	**24,780**	**21,500**	**18,530**	**15,870**	**13,520**	**11,440**	**9,640**
BCH0040L^ACE	**2YL3F15KE**	**35,550**	**31,320**	**27,440**	**23,840**	**20,570**	**17,620**	**15,000**	**12,700**	**10,720**
BCH0060L^ACE	**2YB3F18KE**	**41,090**	**36,360**	**31,910**	**27,810**	**24,030**	**20,600**	**17,550**	**14,860**	**12,570**
BCH0061L^ACE	**3YA3F21KE**	**46,150**	**40,980**	**36,090**	**31,500**	**27,250**	**23,410**	**19,970**	**16,890**	**14,220**
BCH0075L^ACE	**3YB3F24KE**	**54,220**	**48,250**	**42,570**	**37,260**	**32,320**	**27,760**	**23,660**	**19,990**	**16,790**
BCH0090L^ACE	**3YF3F29KE**	**70,270**	**62,070**	**54,430**	**47,330**	**40,810**	**34,910**	**29,580**	**24,800**	**20,580**
BCH0100L^ACE	**3YS3F33KE**	**77,030**	**68,230**	**59,980**	**52,270**	**45,150**	**38,670**	**32,780**	**27,510**	**22,840**
BCH0120L^ACE	**4YBNF40KE**	**95,860**	**84,900**	**74,640**	**64,940**	**56,060**	**47,920**	**40,600**	**34,070**	**28,340**
BCH0150L^ACE	**4YHNF46KE**	**105,590**	**94,140**	**83,200**	**72,800**	**63,070**	**54,090**	**46,000**	**38,710**	**32,290**
BCH0220L^ACE	**4YJNF59KE**	**128,870**	**114,930**	**101,830**	**89,370**	**77,690**	**66,910**	**57,130**	**48,380**	**40,650**

Notes:

^ C = 208-230/3/60, D = 460/3/60, E = 575/3/60

A2L PERFORMANCE DATA – R-454A

Low Temperature Models - Discus™ Compressors

Please consult AWEF table on page 64 and 65 to confirm DOE compliance per model

R-454A		Capacity BTUH @ 100°F Ambient by SST								
Model	Compressor	+0°F	-5°F	-10°F	-15°F	-20°F	-25°F	-30°F	-35°F	-40°F
BCH0030L^ACE	2YF3F13KE	30,980	27,210	23,740	20,570	17,700	15,140	12,860	10,870	9,140
BCH0040L^ACE	2YL3F15KE	34,070	29,990	26,240	22,780	19,620	16,790	14,270	12,060	10,160
BCH0060L^ACE	2YB3F18KE	39,320	34,780	30,500	26,550	22,910	19,610	16,680	14,110	11,910
BCH0061L^ACE	3YA3F21KE	-	39,160	34,470	30,010	25,980	22,290	18,990	16,050	13,490
BCH0075L^ACE	3YB3F24KE	-	46,130	40,670	35,570	30,810	26,430	22,480	18,960	15,900
BCH0090L^ACE	3YF3F29KE	67,380	59,460	52,090	45,240	38,950	33,260	28,120	23,530	19,480
BCH0100L^ACE	3YS3F33KE	73,820	65,340	57,390	49,950	43,090	36,840	31,190	26,110	21,620
BCH0120L^ACE	4YBNF40KE	91,830	81,280	71,350	62,030	53,430	45,620	38,570	32,280	26,780
BCH0150L^ACE	4YHNF46KE	-	90,050	79,530	69,520	60,130	51,480	43,680	36,650	30,470
BCH0220L^ACE	4YJNF59KE	-	-	97,350	85,360	74,120	63,740	54,330	45,920	38,500

R-454A		Capacity BTUH @ 110°F Ambient by SST								
Model	Compressor	+0°F	-5°F	-10°F	-15°F	-20°F	-25°F	-30°F	-35°F	-40°F
BCH0030L^ACE	2YF3F13KE	-	24,920	21,690	18,740	16,070	13,690	11,580	9,740	8,140
BCH0040L^ACE	2YL3F15KE	-	-	23,880	20,670	17,750	15,130	12,820	10,790	9,050
BCH0060L^ACE	2YB3F18KE	-	-	-	-	20,690	17,650	14,970	12,620	10,630
BCH0061L^ACE	3YA3F21KE	-	-	-	-	-	20,110	17,080	14,400	12,090
BCH0075L^ACE	3YB3F24KE	-	-	-	-	27,850	23,820	20,200	17,010	14,240
BCH0090L^ACE	3YF3F29KE	-	54,220	47,410	41,100	35,290	30,010	25,290	21,070	17,370
BCH0100L^ACE	3YS3F33KE	-	-	52,180	45,320	39,010	33,230	28,020	23,360	19,240
BCH0120L^ACE	4YBNF40KE	-	-	64,840	56,230	48,340	41,090	34,590	28,790	23,740
BCH0150L^ACE	4YHNF46KE	-	-	-	-	54,310	46,310	39,110	32,620	26,930
BCH0220L^ACE	4YJNF59KE	-	-	-	-	-	57,490	48,820	41,100	34,330

Notes:

^ C = 208-230/3/60, D = 460/3/60, E = 575/3/60

A2L PERFORMANCE DATA – R-454C

Low Temperature Models - Discus™ Compressors

Please consult AWEF table on page 64 and 65 to confirm DOE compliance per model

R-454C		Capacity BTUH @ 90°F Ambient by SST								
Model	Compressor	+0°F	-5°F	-10°F	-15°F	-20°F	-25°F	-30°F	-35°F	-40°F
BCH0030L^ACE	2YF3F13KE	28,150	24,720	21,590	18,730	16,140	13,800	11,750	9,950	-
BCH0040L^ACE	2YL3F15KE	31,210	27,500	24,020	20,840	17,960	15,360	13,080	11,080	-
BCH0060L^ACE	2YB3F18KE	36,200	31,990	28,050	24,410	21,060	18,020	15,340	13,000	11,030
BCH0061L^ACE	3YA3F21KE	40,780	36,130	31,760	27,690	23,950	20,560	17,530	14,860	12,560
BCH0075L^ACE	3YB3F24KE	48,290	42,770	37,630	32,780	28,310	24,290	20,720	17,540	14,830
BCH0090L^ACE	3YF3F29KE	61,600	54,260	47,410	41,130	35,340	30,160	25,520	21,480	-
BCH0100L^ACE	3YS3F33KE	67,950	59,920	52,480	45,520	39,220	33,470	28,380	23,860	-
BCH0120L^ACE	4YBNF40KE	84,560	74,490	65,160	56,520	48,650	41,530	35,160	29,500	-
BCH0150L^ACE	4YHNF46KE	95,020	84,140	73,940	64,410	55,630	47,590	40,430	34,030	28,430
BCH0220L^ACE	4YJNF59KE	115,530	102,670	90,410	78,940	68,320	58,630	49,880	42,160	35,380

R-454C		Capacity BTUH @ 95°F Ambient by SST								
Model	Compressor	+0°F	-5°F	-10°F	-15°F	-20°F	-25°F	-30°F	-35°F	-40°F
BCH0030L^ACE	**2YF3F13KE**	**27,000**	**23,680**	**20,670**	**17,910**	**15,420**	**13,170**	**11,200**	**9,470**	**-**
BCH0040L^ACE	**2YL3F15KE**	**29,960**	**26,350**	**22,990**	**19,930**	**17,160**	**14,660**	**12,470**	**10,550**	**-**
BCH0060L^ACE	**2YB3F18KE**	**34,690**	**30,640**	**26,870**	**23,330**	**20,090**	**17,190**	**14,620**	**12,390**	**10,510**
BCH0061L^ACE	**3YA3F21KE**	**39,070**	**34,590**	**30,380**	**26,490**	**22,870**	**19,590**	**16,700**	**14,150**	**11,970**
BCH0075L^ACE	**3YB3F24KE**	**46,280**	**40,960**	**35,990**	**31,320**	**27,030**	**23,150**	**19,730**	**16,700**	**14,130**
BCH0090L^ACE	**3YF3F29KE**	**59,080**	**52,060**	**45,410**	**39,350**	**33,760**	**28,770**	**24,320**	**20,450**	**-**
BCH0100L^ACE	**3YS3F33KE**	**65,210**	**57,400**	**50,230**	**43,540**	**37,470**	**31,930**	**27,030**	**22,720**	**-**
BCH0120L^ACE	**4YBNF40KE**	**81,150**	**71,360**	**62,390**	**54,060**	**46,470**	**39,620**	**33,490**	**28,070**	**-**
BCH0150L^ACE	**4YHNF46KE**	**91,100**	**80,610**	**70,780**	**61,590**	**53,150**	**45,380**	**38,510**	**32,350**	**27,010**
BCH0220L^ACE	**4YJNF59KE**	**110,850**	**98,350**	**86,530**	**75,480**	**65,190**	**55,890**	**47,510**	**40,120**	**33,640**

Notes:

^ C = 208-230/3/60, D = 460/3/60, E = 575/3/60

A2L PERFORMANCE DATA – R-454C

Low Temperature Models - Discus™ Compressors

Please consult AWEF table on page 64 and 65 to confirm DOE compliance per model

R-454C		Capacity BTUH @ 100°F Ambient by SST								
Model	Compressor	+0°F	-5°F	-10°F	-15°F	-20°F	-25°F	-30°F	-35°F	-40°F
BCH0030L^ACE	2YF3F13KE	25,860	22,670	19,760	17,110	14,700	12,550	10,660	9,010	-
BCH0040L^ACE	2YL3F15KE	28,680	25,200	21,980	19,020	16,360	13,960	11,860	10,030	-
BCH0060L^ACE	2YB3F18KE	33,200	29,290	25,660	22,240	19,150	16,370	13,900	11,780	10,000
BCH0061L^ACE	3YA3F21KE	-	33,060	29,050	25,270	21,770	18,660	15,900	13,460	11,400
BCH0075L^ACE	3YB3F24KE	44,290	39,150	34,360	29,870	25,770	22,050	18,770	15,890	13,450
BCH0090L^ACE	3YF3F29KE	56,650	49,800	43,430	37,580	32,210	27,400	23,140	19,440	-
BCH0100L^ACE	3YS3F33KE	62,480	54,970	48,030	41,580	35,740	30,420	25,730	21,600	-
BCH0120L^ACE	4YBNF40KE	77,740	68,320	59,650	51,620	44,310	37,720	31,840	26,660	-
BCH0150L^ACE	4YHNF46KE	87,180	77,090	67,620	58,730	50,660	43,210	36,600	30,710	25,600
BCH0220L^ACE	4YJNF59KE	106,080	94,050	82,670	72,030	62,170	53,200	45,170	38,110	31,930

R-454C		Capacity BTUH @ 110°F Ambient by SST								
Model	Compressor	+0°F	-5°F	-10°F	-15°F	-20°F	-25°F	-30°F	-35°F	-40°F
BCH0030L^ACE	2YF3F13KE	-	20,670	17,970	15,530	13,300	11,330	9,600	8,100	-
BCH0040L^ACE	2YL3F15KE	-	-	19,960	17,230	14,790	12,580	10,670	9,010	-
BCH0060L^ACE	2YB3F18KE	-	-	-	20,140	17,300	14,750	12,510	10,590	9,000
BCH0061L^ACE	3YA3F21KE	-	-	-	-	19,720	16,860	14,350	12,160	10,320
BCH0075L^ACE	3YB3F24KE	-	-	-	-	23,270	19,880	16,920	14,340	12,180
BCH0090L^ACE	3YF3F29KE	-	45,420	39,520	34,120	29,190	24,760	20,880	17,530	-
BCH0100L^ACE	3YS3F33KE	-	-	43,680	37,760	32,350	27,480	23,210	19,480	-
BCH0120L^ACE	4YBNF40KE	-	-	54,190	46,770	40,050	33,990	28,620	23,910	-
BCH0150L^ACE	4YHNF46KE	-	-	-	-	45,710	38,890	32,850	27,500	22,880
BCH0220L^ACE	4YJNF59KE	-	-	-	-	56,200	47,940	40,600	34,170	28,620

Notes:

^ C = 208-230/3/60, D = 460/3/60, E = 575/3/60

A2L PERFORMANCE DATA – R-455A

Low Temperature Models - Discus™ Compressors

Please consult AWEF table on page 64 and 65 to confirm DOE compliance per model

R-455A		Capacity BTUH @ 90°F Ambient by SST								
Model	Compressor	+0°F	-5°F	-10°F	-15°F	-20°F	-25°F	-30°F	-35°F	-40°F
BCH0030L^ACE	2YF3F13KE	29,220	25,520	22,170	19,140	16,430	14,010	11,880	-	-
BCH0040L^ACE	2YL3F15KE	32,320	28,320	24,650	21,290	18,270	15,580	13,200	11,130	-
BCH0060L^ACE	2YB3F18KE	37,540	33,040	28,880	25,000	21,480	18,310	15,520	13,080	11,030
BCH0061L^ACE	3YA3F21KE	42,420	37,390	32,760	28,420	24,460	20,910	17,760	14,980	12,570
BCH0075L^ACE	3YB3F24KE	50,370	44,470	38,950	33,830	29,090	24,840	21,050	17,710	14,860
BCH0090L^ACE	3YF3F29KE	64,050	56,230	49,040	42,350	36,240	30,730	25,840	-	-
BCH0100L^ACE	3YS3F33KE	70,600	62,140	54,230	46,950	40,250	34,190	28,760	23,980	-
BCH0120L^ACE	4YBNF40KE	87,610	77,050	67,170	58,120	49,810	42,290	35,570	29,600	-
BCH0150L^ACE	4YHNF46KE	98,440	87,060	76,370	66,360	57,070	48,600	41,000	34,200	28,220
BCH0220L^ACE	4YJNF59KE	119,660	106,090	93,280	81,250	70,130	59,940	50,790	42,650	35,530

R-455A		Capacity BTUH @ 95°F Ambient by SST								
Model	Compressor	+0°F	-5°F	-10°F	-15°F	-20°F	-25°F	-30°F	-35°F	-40°F
BCH0030L^ACE	**2YF3F13KE**	**28,070**	**24,480**	**21,240**	**18,320**	**15,700**	**13,370**	**11,320**	**-**	**-**
BCH0040L^ACE	**2YL3F15KE**	**31,030**	**27,160**	**23,600**	**20,360**	**17,450**	**14,860**	**12,570**	**10,590**	**-**
BCH0060L^ACE	**2YB3F18KE**	**35,990**	**31,650**	**27,630**	**23,900**	**20,490**	**17,450**	**14,760**	**12,440**	**10,480**
BCH0061L^ACE	**3YA3F21KE**	**40,620**	**35,770**	**31,270**	**27,140**	**23,330**	**19,910**	**16,890**	**14,240**	**11,970**
BCH0075L^ACE	**3YB3F24KE**	**48,250**	**42,550**	**37,240**	**32,300**	**27,730**	**23,650**	**20,020**	**16,840**	**14,120**
BCH0090L^ACE	**3YF3F29KE**	**61,430**	**53,930**	**46,950**	**40,480**	**34,590**	**29,280**	**24,570**	**-**	**-**
BCH0100L^ACE	**3YS3F33KE**	**67,700**	**59,530**	**51,930**	**44,870**	**38,410**	**32,570**	**27,360**	**22,760**	**-**
BCH0120L^ACE	**4YBNF40KE**	**84,040**	**73,810**	**64,310**	**55,530**	**47,510**	**40,270**	**33,810**	**28,070**	**-**
BCH0150L^ACE	**4YHNF46KE**	**94,390**	**83,380**	**73,060**	**63,390**	**54,430**	**46,270**	**38,940**	**32,390**	**26,660**
BCH0220L^ACE	**4YJNF59KE**	**114,640**	**101,600**	**89,220**	**77,650**	**66,900**	**57,110**	**48,300**	**40,480**	**33,670**

Notes:

^ C = 208-230/3/60, D = 460/3/60, E = 575/3/60

A2L PERFORMANCE DATA – R-455A

Low Temperature Models - Discus™ Compressors

Please consult AWEF table on page 64 and 65 to confirm DOE compliance per model

R-455A		Capacity BTUH @ 100°F Ambient by SST								
Model	Compressor	+0°F	-5°F	-10°F	-15°F	-20°F	-25°F	-30°F	-35°F	-40°F
BCH0030L^ACE	2YF3F13KE	26,930	23,460	20,340	17,510	14,980	12,730	10,770	9,050	-
BCH0040L^ACE	2YL3F15KE	29,730	26,000	22,560	19,450	16,640	14,140	11,950	10,050	-
BCH0060L^ACE	2YB3F18KE	34,440	30,260	26,390	22,780	19,520	16,600	14,030	11,800	9,930
BCH0061L^ACE	3YA3F21KE	-	34,180	29,840	25,860	22,200	18,940	16,060	13,540	11,380
BCH0075L^ACE	3YB3F24KE	-	40,660	35,550	30,780	26,410	22,480	19,010	15,980	13,420
BCH0090L^ACE	3YF3F29KE	58,870	51,610	44,870	38,630	32,960	27,850	23,330	19,390	-
BCH0100L^ACE	3YS3F33KE	64,880	56,910	49,600	42,800	36,590	30,970	25,990	21,580	-
BCH0120L^ACE	4YBNF40KE	80,500	70,530	61,420	52,950	45,230	38,260	32,060	26,560	-
BCH0150L^ACE	4YHNF46KE	-	79,740	69,780	60,430	51,820	43,950	36,890	30,610	25,110
BCH0220L^ACE	4YJNF59KE	-	97,090	85,230	74,040	63,680	54,280	45,830	38,330	31,840

R-455A		Capacity BTUH @ 110°F Ambient by SST								
Model	Compressor	+0°F	-5°F	-10°F	-15°F	-20°F	-25°F	-30°F	-35°F	-40°F
BCH0030L^ACE	2YF3F13KE	-	-	-	15,920	13,580	11,500	9,690	8,110	-
BCH0040L^ACE	2YL3F15KE	-	-	-	17,640	15,050	12,750	10,740	9,000	7,530
BCH0060L^ACE	2YB3F18KE	-	-	-	-	-	14,920	12,580	10,560	8,890
BCH0061L^ACE	3YA3F21KE	-	-	-	-	-	-	14,440	12,170	10,260
BCH0075L^ACE	3YB3F24KE	-	-	-	-	-	20,220	17,080	14,350	12,090
BCH0090L^ACE	3YF3F29KE	-	-	-	35,010	29,770	25,070	20,940	17,380	-
BCH0100L^ACE	3YS3F33KE	-	-	-	38,740	33,010	27,860	23,300	19,310	15,920
BCH0120L^ACE	4YBNF40KE	-	-	-	47,870	40,740	34,320	28,630	23,630	-
BCH0150L^ACE	4YHNF46KE	-	-	-	-	-	39,410	32,900	27,130	22,120
BCH0220L^ACE	4YJNF59KE	-	-	-	-	-	-	41,010	34,170	28,270

Notes:

^ C = 208-230/3/60, D = 460/3/60, E = 575/3/60

A1 PERFORMANCE DATA – R-404A/R-507A

Low Temperature Models - Discus™ Compressors

Please consult AWEF table on page 64 and 65 to confirm DOE compliance per model

R-404A/R-507A		Capacity BTUH @ 90°F Ambient by SST								
Model	Compressor	+0°F	-5°F	-10°F	-15°F	-20°F	-25°F	-30°F	-35°F	-40°F
BC*0030L@BCD	2DF3F16KE	34,720	31,190	27,800	24,530	21,540	18,730	16,130	13,720	11,510
BC*0040L@BCD	2DL3F20KE	38,770	34,970	31,360	27,850	24,530	21,480	18,630	15,980	13,510
BC*0060L@BCD	2DB3F25KE	45,520	41,220	37,200	33,300	29,560	25,950	22,580	19,380	16,370
BC*0061L@BCD	3DA3F28KE	49,930	45,460	41,030	36,820	32,770	28,930	25,280	21,920	18,800
BC*0075L@BCD	3DB3F33KE	58,360	53,100	48,160	43,330	38,720	34,260	30,010	26,050	22,290
BC*0090L@BCD	3DF3F40KE	76,720	69,450	62,360	55,580	49,230	43,330	37,830	32,740	28,080
BC*0100L@BCD	3DS3F46KE	83,270	75,860	68,790	61,820	55,190	48,850	42,980	37,400	32,190
BC*0120L@BCD	4DBNF54KE	97,570	88,280	79,570	71,140	63,290	55,790	48,690	41,680	34,670
BC*0150L@BCD	4DHNF63KE	111,010	100,980	91,410	82,240	73,570	65,200	57,110	49,370	41,700
BC*0220L@BCD	4DJNF76KE	126,430	116,140	105,810	95,900	86,120	76,550	67,260	57,900	48,980

R-404A/R-507A		Capacity BTUH @ 95°F Ambient by SST								
Model	Compressor	+0°F	-5°F	-10°F	-15°F	-20°F	-25°F	-30°F	-35°F	-40°F
BC*0030L@BCD	**2DF3F16KE**	**33,020**	**29,660**	**26,390**	**23,340**	**20,440**	**17,720**	**15,180**	**12,840**	**10,680**
BC*0040L@BCD	**2DL3F20KE**	**36,890**	**33,270**	**29,820**	**26,450**	**23,320**	**20,370**	**17,620**	**15,030**	**12,660**
BC*0060L@BCD	**2DB3F25KE**	**43,290**	**39,320**	**35,420**	**31,700**	**28,130**	**24,680**	**21,450**	**18,360**	**15,440**
BC*0061L@BCD	**3DA3F28KE**	**47,560**	**43,330**	**39,100**	**35,080**	**31,210**	**27,460**	**23,970**	**20,710**	**17,630**
BC*0075L@BCD	**3DB3F33KE**	**55,720**	**50,740**	**46,050**	**41,450**	**37,040**	**32,730**	**28,620**	**24,770**	**21,080**
BC*0090L@BCD	**3DF3F40KE**	**73,480**	**66,560**	**59,680**	**53,300**	**47,190**	**41,510**	**36,190**	**31,240**	**26,650**
BC*0100L@BCD	**3DS3F46KE**	**79,590**	**72,570**	**65,870**	**59,160**	**52,810**	**46,760**	**41,110**	**35,710**	**30,640**
BC*0120L@BCD	**4DBNF54KE**	**93,150**	**84,320**	**76,040**	**67,990**	**60,370**	**53,140**	**46,120**	**39,140**	**32,200**
BC*0150L@BCD	**4DHNF63KE**	**106,100**	**96,530**	**87,340**	**78,640**	**70,170**	**62,050**	**54,190**	**46,660**	**39,160**
BC*0220L@BCD	**4DJNF76KE**	**—**	**110,700**	**100,820**	**91,270**	**81,870**	**72,590**	**63,410**	**54,500**	**45,610**

Notes:
* H = Outdoor, N = Indoor models only available as model Rev A
@ C = 208-230/3/60, D = 460/3/60, E = 575/3/60

A1 PERFORMANCE DATA – R-404A/R-507A

Low Temperature Models - Discus™ Compressors (cont.)

Please consult AWEF table on page 64 and 65 to confirm DOE compliance per model

R-404A/R-507A		Capacity BTUH @ 100°F Ambient by SST								
Model	Compressor	+0°F	-5°F	-10°F	-15°F	-20°F	-25°F	-30°F	-35°F	-40°F
BC*0030L@BCD	2DF3F16KE	31,380	28,080	25,020	22,110	19,330	16,710	14,240	11,960	9,830
BC*0040L@BCD	2DL3F20KE	34,990	31,550	28,260	25,060	22,070	19,240	16,600	14,100	11,810
BC*0060L@BCD	2DB3F25KE	—	37,290	33,610	30,080	26,680	23,410	20,330	17,360	14,520
BC*0061L@BCD	3DA3F28KE	—	—	37,210	33,300	29,580	26,040	22,650	19,460	16,430
BC*0075L@BCD	3DB3F33KE	—	—	43,920	39,550	35,270	31,160	27,240	23,460	19,810
BC*0090L@BCD	3DF3F40KE	70,200	63,590	57,120	50,990	45,130	39,670	34,520	29,710	25,240
BC*0100L@BCD	3DS3F46KE	75,830	69,190	62,790	56,380	50,370	44,620	39,120	33,900	28,930
BC*0120L@BCD	4DBNF54KE	88,590	80,280	72,410	64,670	57,330	50,330	43,450	36,540	29,690
BC*0150L@BCD	4DHNF63KE	—	92,130	83,380	75,050	66,870	58,990	51,430	44,100	36,770
BC*0220L@BCD	4DJNF76KE	—	—	—	86,680	77,610	68,540	59,790	50,980	42,220

R-404A/R-507A		Capacity BTUH @ 110°F Ambient by SST								
Model	Compressor	+0°F	-5°F	-10°F	-15°F	-20°F	-25°F	-30°F	-35°F	-40°F
BC*0030L@BCD	2DF3F16KE	—	—	22,290	19,630	17,050	14,610	12,330	10,150	8,070
BC*0040L@BCD	2DL3F20KE	—	—	—	22,290	19,570	16,960	14,530	12,250	10,110
BC*0060L@BCD	2DB3F25KE	—	—	—	—	—	20,910	18,100	15,390	12,770
BC*0061L@BCD	3DA3F28KE	—	—	—	—	—	22,950	19,770	16,730	13,910
BC*0075L@BCD	3DB3F33KE	—	—	—	—	—	28,020	24,380	20,760	17,260
BC*0090L@BCD	3DF3F40KE	—	—	—	46,280	41,000	35,930	31,150	26,610	22,380
BC*0100L@BCD	3DS3F46KE	—	—	—	—	45,220	39,910	34,840	29,910	25,270
BC*0120L@BCD	4DBNF54KE	—	—	—	—	51,000	44,370	37,680	31,070	24,270
BC*0150L@BCD	4DHNF63KE	—	—	—	—	—	53,430	46,440	39,470	32,480
BC*0220L@BCD	4DJNF76KE	—	—	—	—	—	—	52,250	43,760	—

Notes:
* H = Outdoor, N = Indoor models only available as model Rev A
@ C = 208-230/3/60, D = 460/3/60, E = 575/3/60

A1 PERFORMANCE DATA – R-448A/R-449A

Low Temperature Models - Discus™ Compressors

Please consult AWEF table on page 64 and 65 to confirm DOE compliance per model

R-448A/R-449A		Capacity BTUH @ 90°F Ambient by SST								
Model	Compressor	+0°F	-5°F	-10°F	-15°F	-20°F	-25°F	-30°F	-35°F	-40°F
BC*0030L@BCD	2DF3F16KE	30,170	26,290	22,820	19,700	16,920	14,420	12,210	10,210	8,370
BC*0040L@BCD	2DL3F20KE	34,930	30,890	27,070	23,430	20,110	17,040	14,280	11,880	9,860
BC*0060L@BCD	2DB3F25KE	41,710	36,860	32,450	28,300	24,570	21,140	17,910	14,780	11,760
BC*0061L@BCD	3DA3F28KE	46,610	41,110	36,090	31,430	27,190	23,350	20,020	17,090	14,540
BC*0075L@BCD	3DB3F33KE	55,730	49,480	43,740	38,510	33,570	29,100	25,030	21,120	17,380
BC*0090L@BCD	3DF3F40KE	72,550	63,930	55,960	48,610	42,040	36,080	30,670	25,750	21,280
BC*0100L@BCD	3DS3F46KE	78,190	68,980	60,530	52,660	45,540	39,090	33,260	27,890	22,990
BC*0120L@BCD	4DBNF54KE	92,720	82,620	72,740	63,340	54,530	46,530	39,210	32,590	26,850
BC*0150L@BCD	4DHNF63KE	103,640	93,150	83,080	73,250	63,950	55,420	47,770	40,940	35,040
BC*0220L@BCD	4DJNF76KE	125,150	111,250	98,440	86,630	75,730	65,580	55,760	46,390	36,730

R-448A/R-449A		Capacity BTUH @ 95°F Ambient by SST								
Model	Compressor	+0°F	-5°F	-10°F	-15°F	-20°F	-25°F	-30°F	-35°F	-40°F
BC*0030L@BCD	**2DF3F16KE**	**28,880**	**25,120**	**21,790**	**18,780**	**16,090**	**13,670**	**11,520**	**9,570**	**7,760**
BC*0040L@BCD	**2DL3F20KE**	**33,480**	**29,570**	**25,850**	**22,380**	**19,140**	**16,180**	**13,510**	**11,190**	**9,240**
BC*0060L@BCD	**2DB3F25KE**	**40,080**	**35,380**	**31,110**	**27,090**	**23,420**	**20,080**	**16,940**	**13,890**	**10,940**
BC*0061L@BCD	**3DA3F28KE**	**44,550**	**39,220**	**34,370**	**29,850**	**25,710**	**21,990**	**18,770**	**15,920**	**13,430**
BC*0075L@BCD	**3DB3F33KE**	**53,460**	**47,380**	**41,780**	**36,670**	**31,840**	**27,500**	**23,480**	**19,620**	**15,980**
BC*0090L@BCD	**3DF3F40KE**	**69,520**	**61,160**	**53,440**	**46,250**	**39,880**	**34,050**	**28,730**	**23,880**	**19,470**
BC*0100L@BCD	**3DS3F46KE**	**74,860**	**66,060**	**57,720**	**50,070**	**43,160**	**36,850**	**31,090**	**25,840**	**21,050**
BC*0120L@BCD	**4DBNF54KE**	**88,540**	**78,830**	**69,280**	**60,170**	**51,720**	**43,870**	**36,700**	**30,250**	**24,670**
BC*0150L@BCD	**4DHNF63KE**	**99,120**	**89,040**	**79,380**	**69,890**	**60,980**	**52,630**	**45,240**	**38,610**	**32,850**
BC*0220L@BCD	**4DJNF76KE**	**119,960**	**106,190**	**93,800**	**82,310**	**71,670**	**61,640**	**52,220**	**42,850**	**33,380**

Notes:
* H = Outdoor, N = Indoor models only available as model Rev A
@ C = 208-230/3/60, D = 460/3/60, E = 575/3/60

A1 PERFORMANCE DATA – R-448A/R-449A

Low Temperature Models - Discus™ Compressors (cont.)

Please consult AWEF table on page 64 and 65 to confirm DOE compliance per model

R-448A/R-449A		Capacity BTUH @ 100°F Ambient by SST								
Model	Compressor	+0°F	-5°F	-10°F	-15°F	-20°F	-25°F	-30°F	-35°F	-40°F
BC*0030L@BCD	2DF3F16KE	27,610	23,960	20,760	17,860	15,270	12,930	10,840	8,930	7,150
BC*0040L@BCD	2DL3F20KE	31,970	28,170	24,630	21,290	18,180	15,320	12,750	10,520	8,660
BC*0060L@BCD	2DB3F25KE	38,420	33,880	29,690	25,830	22,290	19,050	15,990	13,020	10,160
BC*0061L@BCD	3DA3F28KE	42,470	37,400	32,610	28,310	24,280	20,670	17,510	14,690	12,290
BC*0075L@BCD	3DB3F33KE	51,150	45,240	39,780	34,790	30,150	25,840	21,880	18,110	14,540
BC*0090L@BCD	3DF3F40KE	66,410	58,340	50,810	43,950	37,680	31,980	26,750	21,980	17,630
BC*0100L@BCD	3DS3F46KE	71,430	62,960	54,820	47,460	40,750	34,590	28,930	23,760	19,040
BC*0120L@BCD	4DBNF54KE	84,290	74,940	65,650	56,900	48,740	41,120	34,090	27,800	22,350
BC*0150L@BCD	4DHNF63KE	94,590	84,930	75,640	66,480	57,830	49,870	42,660	36,160	30,600
BC*0220L@BCD	4DJNF76KE	114,500	101,160	89,140	77,980	67,730	57,860	48,560	39,300	30,130

R-448A/R-449A		Capacity BTUH @ 110°F Ambient by SST								
Model	Compressor	+0°F	-5°F	-10°F	-15°F	-20°F	-25°F	-30°F	-35°F	-40°F
BC*0030L@BCD	2DF3F16KE	25,020	21,720	18,740	16,060	13,640	11,460	9,490	7,690	5,980
BC*0040L@BCD	2DL3F20KE	28,850	25,420	22,150	19,070	16,210	13,570	11,230	9,200	7,530
BC*0060L@BCD	2DB3F25KE	34,970	30,790	26,940	23,330	20,030	16,980	14,100	11,340	8,660
BC*0061L@BCD	3DA3F28KE	—	33,560	29,110	25,070	21,250	17,930	14,910	12,260	10,010
BC*0075L@BCD	3DB3F33KE	—	40,910	35,750	30,980	26,460	22,440	18,600	15,020	11,650
BC*0090L@BCD	3DF3F40KE	60,370	52,650	45,610	39,170	33,220	27,720	22,730	18,170	13,880
BC*0100L@BCD	3DS3F46KE	64,690	56,770	49,250	42,260	35,870	29,930	24,530	19,590	14,950
BC*0120L@BCD	4DBNF54KE	75,530	66,900	58,300	50,190	42,470	35,210	28,620	22,660	17,400
BC*0150L@BCD	4DHNF63KE	85,510	76,650	68,100	59,510	51,610	44,140	37,390	31,280	26,060
BC*0220L@BCD	4DJNF76KE	—	—	79,820	69,280	59,520	49,950	41,080	32,240	23,390

Notes:
* H = Outdoor, N = Indoor models only available as model Rev A
@ C = 208-230/3/60, D = 460/3/60, E = 575/3/60

A1 PERFORMANCE DATA – R-407A/R-407F

Low Temperature Models - Discus™ Compressors

Please consult AWEF table on page 64 and 65 to confirm DOE compliance per model

R-407A/R-407F		Capacity BTUH @ 90°F Ambient by SST								
Model	Compressor	+0°F	-5°F	-10°F	-15°F	-20°F	-25°F	-30°F	-35°F	-40°F
BC*0030L@BCD	2DF3F16KE	30,720	26,810	23,330	20,170	17,340	14,740	12,360	10,140	8,030
BC*0040L@BCD	2DL3F20KE	35,250	31,330	27,510	23,910	20,510	17,350	14,430	11,760	9,410
BC*0060L@BCD	2DB3F25KE	42,080	37,310	32,880	28,770	24,920	21,410	18,150	15,070	12,160
BC*0061L@BCD	3DA3F28KE	46,820	41,470	36,580	31,990	27,690	23,720	20,110	16,630	13,300
BC*0075L@BCD	3DB3F33KE	55,850	49,780	44,160	38,920	34,050	29,410	25,110	20,880	16,660
BC*0090L@BCD	3DF3F40KE	72,680	64,500	56,810	49,500	42,890	36,690	30,930	25,490	20,430
BC*0100L@BCD	3DS3F46KE	77,230	68,550	60,530	53,020	45,900	39,460	33,350	27,510	21,830
BC*0120L@BCD	4DBNF54KE	93,530	83,540	73,940	64,580	55,560	47,270	39,530	32,330	25,840
BC*0150L@BCD	4DHNF63KE	103,910	93,780	83,890	74,320	64,930	56,090	47,880	40,210	33,200
BC*0220L@BCD	4DJNF76KE	117,480	106,250	95,530	85,250	75,540	66,130	57,200	48,330	39,660

R-407A/R-407F		Capacity BTUH @ 95°F Ambient by SST								
Model	Compressor	+0°F	-5°F	-10°F	-15°F	-20°F	-25°F	-30°F	-35°F	-40°F
BC*0030L@BCD	**2DF3F16KE**	**29,270**	**25,550**	**22,210**	**19,190**	**16,450**	**13,950**	**11,640**	**9,490**	**7,430**
BC*0040L@BCD	**2DL3F20KE**	**33,670**	**29,900**	**26,260**	**22,720**	**19,480**	**16,440**	**13,630**	**11,060**	**8,810**
BC*0060L@BCD	**2DB3F25KE**	**40,280**	**35,680**	**31,450**	**27,430**	**23,720**	**20,350**	**17,220**	**14,280**	**11,510**
BC*0061L@BCD	**3DA3F28KE**	**44,640**	**39,480**	**34,760**	**30,320**	**26,180**	**22,350**	**18,790**	**15,370**	**12,140**
BC*0075L@BCD	**3DB3F33KE**	**53,400**	**47,530**	**42,070**	**37,030**	**32,180**	**27,680**	**23,500**	**19,350**	**15,280**
BC*0090L@BCD	**3DF3F40KE**	**69,700**	**61,680**	**54,130**	**47,020**	**40,560**	**34,520**	**28,890**	**23,690**	**18,840**
BC*0100L@BCD	**3DS3F46KE**	**73,890**	**65,470**	**57,680**	**50,300**	**43,560**	**37,250**	**31,330**	**25,650**	**20,220**
BC*0120L@BCD	**4DBNF54KE**	**89,060**	**79,480**	**70,210**	**61,140**	**52,580**	**44,480**	**36,930**	**29,970**	**23,660**
BC*0150L@BCD	**4DHNF63KE**	**99,100**	**89,410**	**79,930**	**70,700**	**61,680**	**53,140**	**45,210**	**37,780**	**30,980**
BC*0220L@BCD	**4DJNF76KE**	**112,180**	**101,300**	**91,200**	**81,500**	**72,250**	**63,180**	**54,600**	**46,050**	**37,600**

Notes:
* H = Outdoor, N = Indoor models only available as model Rev A
@ C = 208-230/3/60, D = 460/3/60, E = 575/3/60

A1 PERFORMANCE DATA – R-407A/R-407F

Low Temperature Models - Discus™ Compressors (cont.)

Please consult AWEF table on page 64 and 65 to confirm DOE compliance per model

R-407A/R-407F		Capacity BTUH @ 100°F Ambient by SST								
Model	Compressor	+0°F	-5°F	-10°F	-15°F	-20°F	-25°F	-30°F	-35°F	-40°F
BC*0030L@BCD	2DF3F16KE	27,890	24,300	21,110	18,200	15,570	13,140	10,930	8,840	6,840
BC*0040L@BCD	2DL3F20KE	32,060	28,440	24,910	21,590	18,450	15,520	12,820	10,380	8,230
BC*0060L@BCD	2DB3F25KE	38,440	34,020	29,960	26,050	22,520	19,290	16,300	13,510	10,890
BC*0061L@BCD	3DA3F28KE	42,440	37,470	32,920	28,700	24,660	20,900	17,400	14,100	10,950
BC*0075L@BCD	3DB3F33KE	50,940	45,250	39,950	35,040	30,370	25,990	21,870	17,820	13,870
BC*0090L@BCD	3DF3F40KE	66,750	58,900	51,520	44,540	38,250	32,360	26,910	21,890	17,250
BC*0100L@BCD	3DS3F46KE	70,480	62,480	54,770	47,650	41,130	35,010	29,300	23,840	18,630
BC*0120L@BCD	4DBNF54KE	84,510	75,290	66,400	57,630	49,420	41,590	34,250	27,500	21,400
BC*0150L@BCD	4DHNF63KE	94,270	85,020	75,890	67,070	58,450	50,150	42,490	35,290	28,690
BC*0220L@BCD	4DJNF76KE	106,410	96,140	86,670	77,530	68,780	60,110	51,880	43,620	35,410

R-407A/R-407F		Capacity BTUH @ 110°F Ambient by SST								
Model	Compressor	+0°F	-5°F	-10°F	-15°F	-20°F	-25°F	-30°F	-35°F	-40°F
BC*0030L@BCD	2DF3F16KE	25,170	21,850	18,930	16,260	13,830	11,590	9,520	7,570	5,680
BC*0040L@BCD	2DL3F20KE	28,770	25,380	22,200	19,200	16,340	13,670	11,230	9,040	7,130
BC*0060L@BCD	2DB3F25KE	34,640	30,600	26,860	23,360	20,090	17,170	14,480	12,000	9,710
BC*0061L@BCD	3DA3F28KE	—	33,430	29,190	25,250	21,440	17,990	14,670	11,550	8,530
BC*0075L@BCD	3DB3F33KE	—	40,620	35,620	30,990	26,520	22,440	18,480	14,690	11,000
BC*0090L@BCD	3DF3F40KE	61,050	53,320	46,330	39,810	33,740	28,170	23,050	18,380	14,140
BC*0100L@BCD	3DS3F46KE	63,540	56,040	48,940	42,280	36,230	30,560	25,280	20,260	15,520
BC*0120L@BCD	4DBNF54KE	75,210	66,880	58,580	50,510	42,820	35,430	28,610	22,320	16,510
BC*0150L@BCD	4DHNF63KE	—	76,220	68,020	59,740	51,730	44,130	36,950	30,220	23,940
BC*0220L@BCD	4DJNF76KE	—	—	76,950	68,850	61,140	53,310	45,730	38,180	30,450

Notes:
* H = Outdoor, N = Indoor models only available as model Rev A
@ C = 208-230/3/60, D = 460/3/60, E = 575/3/60

A1 PERFORMANCE DATA – R-407C

Low Temperature Models - Discus™ Compressors

Please consult AWEF table on page 64 and 65 to confirm DOE compliance per model

R-407C		Capacity BTUH @ 90°F Ambient by SST								
Model	Compressor	+0°F	-5°F	-10°F	-15°F	-20°F	-25°F	-30°F	-35°F	-40°F
BC*0030L@BCD	2DF3F16KE	26,570	23,160	20,110	17,360	14,900	12,710	10,720	8,870	7,100
BC*0040L@BCD	2DL3F20KE	30,760	27,190	23,830	20,660	17,680	14,920	12,430	10,160	8,170
BC*0060L@BCD	2DB3F25KE	37,130	32,760	28,770	25,030	21,650	18,500	15,590	12,910	10,390
BC*0061L@BCD	3DA3F28KE	41,900	36,900	32,290	28,000	24,000	20,330	17,010	13,960	11,260
BC*0075L@BCD	3DB3F33KE	49,790	44,010	38,740	33,800	29,300	25,060	21,240	17,650	14,350
BC*0090L@BCD	3DF3F40KE	64,030	56,580	49,570	42,970	36,740	31,080	25,910	21,220	17,130
BC*0100L@BCD	3DS3F46KE	68,490	60,540	53,000	46,050	39,510	33,510	28,050	22,970	18,380
BC*0120L@BCD	4DBNF54KE	82,720	72,560	63,010	54,310	46,290	39,020	32,490	26,480	21,110
BC*0150L@BCD	4DHNF63KE	92,760	81,950	72,050	62,650	54,240	46,530	39,450	33,040	27,100
BC*0220L@BCD	4DJNF76KE	106,920	94,180	82,860	72,640	63,380	55,020	47,360	39,930	32,610

R-407C		Capacity BTUH @ 95°F Ambient by SST								
Model	Compressor	+0°F	-5°F	-10°F	-15°F	-20°F	-25°F	-30°F	-35°F	-40°F
BC*0030L@BCD	2DF3F16KE	25,530	22,250	19,300	16,650	14,260	12,120	10,140	8,300	6,520
BC*0040L@BCD	2DL3F20KE	29,620	26,140	22,890	19,810	16,890	14,210	11,750	9,540	7,560
BC*0060L@BCD	2DB3F25KE	35,790	31,530	27,630	23,980	20,690	17,590	14,770	12,100	9,620
BC*0061L@BCD	3DA3F28KE	40,100	35,310	30,770	26,610	22,740	19,130	15,910	12,920	10,260
BC*0075L@BCD	3DB3F33KE	47,860	42,170	36,990	32,180	27,730	23,530	19,770	16,310	13,090
BC*0090L@BCD	3DF3F40KE	61,670	54,300	47,430	40,900	34,850	29,330	24,280	19,810	15,880
BC*0100L@BCD	3DS3F46KE	65,820	58,070	50,760	43,930	37,550	31,710	26,420	21,500	17,070
BC*0120L@BCD	4DBNF54KE	79,200	69,330	60,040	51,600	43,770	36,730	30,320	24,480	19,210
BC*0150L@BCD	4DHNF63KE	88,830	78,370	68,760	59,770	51,480	43,930	37,090	30,870	25,090
BC*0220L@BCD	4DJNF76KE	102,420	90,150	79,340	69,530	60,620	52,560	45,080	37,800	30,630

Notes:
* H = Outdoor, N = Indoor models only available as model Rev A
@ C = 208-230/3/60, D = 460/3/60, E = 575/3/60

A1 PERFORMANCE DATA – R-407C

Low Temperature Models - Discus™ Compressors (cont.)

Please consult AWEF table on page 64 and 65 to confirm DOE compliance per model

R-407C		Capacity BTUH @ 100°F Ambient by SST								
Model	Compressor	+0°F	-5°F	-10°F	-15°F	-20°F	-25°F	-30°F	-35°F	-40°F
BC*0030L@BCD	2DF3F16KE	24,490	21,330	18,470	15,900	13,580	11,460	9,520	7,670	—
BC*0040L@BCD	2DL3F20KE	28,410	25,030	21,880	18,860	16,030	13,420	11,010	8,820	6,860
BC*0060L@BCD	2DB3F25KE	34,350	30,210	26,370	22,860	19,590	16,610	13,810	11,220	8,760
BC*0061L@BCD	3DA3F28KE	38,230	33,590	29,190	25,100	21,340	17,910	14,710	11,840	9,210
BC*0075L@BCD	3DB3F33KE	45,930	40,320	35,230	30,450	26,050	22,030	18,280	14,860	11,730
BC*0090L@BCD	3DF3F40KE	59,230	51,960	45,230	38,810	32,880	27,520	22,600	18,260	14,510
BC*0100L@BCD	3DS3F46KE	62,970	55,330	48,320	41,710	35,480	29,860	24,670	19,970	15,700
BC*0120L@BCD	4DBNF54KE	75,540	65,960	56,910	48,770	41,120	34,290	27,970	22,300	17,190
BC*0150L@BCD	4DHNF63KE	84,840	74,700	65,390	56,570	48,650	41,290	34,700	28,600	23,010
BC*0220L@BCD	4DJNF76KE	97,600	85,850	75,520	66,130	57,620	49,790	42,470	35,490	28,450

R-407C		Capacity BTUH @ 110°F Ambient by SST								
Model	Compressor	+0°F	-5°F	-10°F	-15°F	-20°F	-25°F	-30°F	-35°F	-40°F
BC*0030L@BCD	2DF3F16KE	22,390	19,390	16,700	14,270	12,010	9,950	8,010	—	—
BC*0040L@BCD	2DL3F20KE	25,760	22,610	19,590	16,760	14,060	11,550	9,220	—	—
BC*0060L@BCD	2DB3F25KE	31,120	27,220	23,580	20,230	17,160	14,240	11,560	9,050	—
BC*0061L@BCD	3DA3F28KE	34,300	29,930	25,860	21,980	18,460	15,150	12,140	9,410	—
BC*0075L@BCD	3DB3F33KE	42,070	36,620	31,710	27,080	22,760	18,770	15,180	11,890	—
BC*0090L@BCD	3DF3F40KE	54,120	47,130	40,540	34,390	28,790	23,590	19,000	14,950	11,510
BC*0100L@BCD	3DS3F46KE	56,860	49,680	43,100	36,730	31,020	25,650	20,880	16,500	12,550
BC*0120L@BCD	4DBNF54KE	67,840	58,890	50,470	42,590	35,510	28,930	23,020	17,650	—
BC*0150L@BCD	4DHNF63KE	76,550	67,100	58,260	50,170	42,570	35,690	29,470	23,750	18,480
BC*0220L@BCD	4DJNF76KE	—	76,560	66,850	58,440	50,460	43,140	36,450	29,760	23,180

Notes:
* H = Outdoor, N = Indoor models only available as model Rev A
@ C = 208-230/3/60, D = 460/3/60, E = 575/3/60

A2L UNIT SPECIFICATIONS

Medium & Low Temperature Models - Discus Compressors

Please consult AWEF table on pages 62, 63, 64 and 65 to confirm DOE compliance per model

Model	Compressor	Refrigerant Line Connections (OD)		Rec. Capacity @90% full (lbs)		Cabinet[h]	Dimensions (In.)			Net Wt.	Sound Data
		Liquid	Suction	Std	Opt		Depth	Width	Height	(lbs.)	dBa[†]
BCH0050M@ACE	2YC3R51KE	1/2	1 1/8	28	52	C4	36.75	51.75	39.25	751	78
BCH0051M@ACE	2YD3R59KE	1/2	1 1/8	28	52	C4	36.75	51.75	39.25	751	78
BCH0075M@ACE	2YL3R73KE	1/2	1 1/8	28	52	C4	36.75	51.75	39.25	761	78
BCH0076M@ACE	2YA3R82K0	5/8	1 3/8	67	78	C5	36.75	63.75	39.25	985	82
BCH0080M@ACE	3YA3R99KE	5/8	1 3/8	67	78	C5	36.75	63.75	39.25	1020	82
BCH0100M@ACE	3YB3R11ME	5/8	1 3/8	67	78	C5	36.75	63.75	39.25	1045	82
BCH0120M@ACE	3YF3R14ME	5/8	1 3/8	67	78	C5	36.75	63.75	39.25	1065	82
BCH0150M@ACE	3YS3R16ME	7/8	1 5/8	87	98	C6	41.75	75.125	48.75	1182	81
BCH0030L@ACE	2YF3F13KE	1/2	1 1/8	28	52	C4	36.75	51.75	39.25	737	78
BCH0040L@ACE	2YL3F15KE	1/2	1 1/8	28	52	C4	36.75	51.75	39.25	741	78
BCH0060L@ACE	2YB3F18KE	1/2	1 1/8	28	52	C4	36.75	51.75	39.25	751	78
BCH0061L@ACE	3YA3F21KE	1/2	1 1/8	28	52	C4	36.75	51.75	39.25	781	81
BCH0075L@ACE	3YB3F24KE	1/2	1 1/8	28	52	C4	36.75	51.75	39.25	805	81
BCH0090L@ACE	3YF3F29KE	5/8	1 3/8	67	78	C5	36.75	63.75	39.25	1030	82
BCH0100L@ACE	3YS3F33KE	5/8	1 3/8	67	78	C5	36.75	63.75	39.25	1035	82
BCH0120L@ACE	4YBNF40KE	7/8	1 5/8	70	87	C6	41.75	75.125	48.75	1199	82
BCH0150L@ACE	4YHNF46KE	7/8	1 5/8	70	87	C6	41.75	75.125	48.75	1234	82
BCH0220L@ACE	4YJNF59KE	7/8	1 5/8	87	98	C6	41.75	75.125	48.75	1224	82

Notes:

@ C = 208-230/3/60, D = 460/3/60, E = 575/3/60

[†] Estimated sound pressure values are 10 feet from the unit. For estimating sound pressure from the unit at different distances, deduct the following from the unit values: 20 feet, deduct 6 dBA; for 40 feet, deduct 12 dBA; for 80 feet, deduct 18 dBA. This data is typical of "free field" conditions for horizontal air cooled condensing units at the outlet of the discharge air. The actual sound measurements may vary depending on the condensing unit installation. Factors such as reflecting walls, background noise and mounting conditions may have a significant influence on this data.

A1 UNIT SPECIFICATIONS

Medium & Low Temperature Models - Discus™ Compressors

Please consult AWEF table on pages 62, 63, 64 and 65 to confirm DOE compliance per model

Model	Compressor	Refrigerant Line Connections (OD)		Rec. Capacity @90% full (lbs)		Cabinet[h]	Dimensions (In.)			Net Wt.	Sound Data
		Liquid	Suction	Std	Opt		Depth	Width	Height	(lbs.)	dBa[†]
BC*0050M@ACD	2DC3R53KE	1/2	1 1/8	28	52	C4	36.75	51.75	39.25	751	78
BC*0051M@ACD	2DD3R63KE	1/2	1 1/8	28	52	C4	36.75	51.75	39.25	751	78
BC*0075M@ACD	2DL3R78KE	1/2	1 1/8	28	52	C4	36.75	51.75	39.25	761	78
BC*0076M@ACD	2DA3R89KE	5/8	1 3/8	67	78	C5	36.75	63.75	39.25	985	82
BC*0080M@ACD	3DA3R10ME	5/8	1 3/8	67	78	C5	36.75	63.75	39.25	1,020	82
BC*0100M@ACD	3DB3R12ME	5/8	1 3/8	67	78	C5	36.75	63.75	39.25	1,045	82
BC*0120M@ACD	3DF3R15ME	5/8	1 3/8	67	78	C5	36.75	63.75	39.25	1,065	82
BC*0150M@ACD	3DS3R17ME	7/8	1 5/8	87	98	C6	41.75	75.125	48.75	1,182	81
BC*0030L@BCD	2DF3F16KE	1/2	1 1/8	28	52	C4	36.75	51.75	39.25	737	78
BC*0040L@BCD	2DL3F20KE	1/2	1 1/8	28	52	C4	36.75	51.75	39.25	741	78
BC*0060L@BCD	2DB3F25KE	1/2	1 1/8	28	52	C4	36.75	51.75	39.25	751	78
BC*0061L@BCD	3DA3F28KE	1/2	1 1/8	28	52	C4	36.75	51.75	39.25	781	81
BC*0075L@BCD	3DB3F33KE	1/2	1 1/8	28	52	C4	36.75	51.75	39.25	805	81
BC*0090L@BCD	3DF3F40KE	5/8	1 3/8	67	78	C5	36.75	63.75	39.25	1,030	82
BC*0100L@BCD	3DS3F46KE	5/8	1 3/8	67	78	C5	36.75	63.75	39.25	1,035	82
BC*0120L@BCD	4DBNF54KE	7/8	1 5/8	87	98	C6	41.75	75.125	48.75	1,199	82
BC*0150L@BCD	4DHNF63KE	7/8	1 5/8	87	98	C6	41.75	75.125	48.75	1,234	82
BC*0220L@BCD	4DJNF76KE	7/8	1 5/8	87	98	C6	41.75	75.125	48.75	1,224	82

Notes:

* H = Outdoor, N = Indoor models only available as model Rev A

@ C = 208-230/3/60, D = 460/3/60, E = 575/3/60

† Estimated sound pressure values are 10 feet from the unit. For estimating sound pressure from the unit at different distances, deduct the following from the unit values: 20 feet, deduct 6 dBA; for 40 feet, deduct 12 dBA; for 80 feet, deduct 18 dBA. This data is typical of "free field" conditions for horizontal air cooled condensing units at the outlet of the discharge air. The actual sound measurements may vary depending on the condensing unit installation. Factors such as reflecting walls, background noise and mounting conditions may have a significant influence on this data.

A2L ELECTRICAL DATA

Medium Temperature Models - Discus™ Compressors

Please consult AWEF table on page 64 and 65 to confirm DOE compliance per model

Model	Compressor	Power†	Compressor		Condenser		intelliGen™		Remote Loads- Low Amps^				Remote Loads- High Amps^			
			RLA[c]	LRA	No. Fans	FLA (ea)	MCA	MOPD	Evap. Fan Amps	Defrost Htrs. Amps‡	Electric Defrost MCA	Electric Defrost MOPD	Evap. Fan Amps	Defrost Htrs. Amps‡	Electric Defrost MCA	Electric Defrost MOPD
BCH0050MCACE	2YC3R51KE-TFC	208-230/3/60	20.0	120.0	1	2.2	27.2	45.0	—	—	—	—	15	40 (1)	50.0	60
BCH0050MDACE	2YC3R51KE-TFD	460/3/60	9.4	60.0	1	1.2	15.0	20.0	—	—	—	—	8	20 (1)	25.0	30
BCH0050MEACE	2YC3R51KE-TFE	575/3/60	6.9	49.0	1	0.8	15.0	15.0	—	—	—	—	6.4	16 (1)	20.0	20
BCH0051MCACE	2YD3R59KE-TFC	208-230/3/60	20.0	120.0	1	2.2	27.2	45.0	—	—	—	—	15	40 (1)	50.0	60
BCH0051MDACE	2YD3R59KE-TFD	460/3/60	9.4	60.0	1	1.2	15.0	20.0	—	—	—	—	8	20 (1)	25.0	30
BCH0051MEACE	2YD3R59KE-TFE	575/3/60	7.1	49.0	1	0.8	15.0	15.0	—	—	—	—	6.4	16 (1)	20.0	20
BCH0075MCACE	2YL3R73KE-TFC	208-230/3/60	28.3	169.0	1	2.2	37.6	60.0	—	—	—	—	20	48 (1)	60.0	80
BCH0075MDACE	2YL3R73KE-TFD	460/3/60	12.4	85.0	1	1.2	20.0	25.0	—	—	—	—	10	25 (1)	31.3	35
BCH0075MEACE	2YL3R73KE-TFE	575/3/60	11.9	67.0	1	0.8	20.0	25.0	—	—	—	—	8	20 (1)	25.0	35
BCH0076MCACE	2YA3R82K0-TFC	208-230/3/60	28.7	169.0	2	2.2	40.3	60.0	—	—	—	—	20	48 (1)	60.3	80
BCH0076MDACE	2YA3R82K1-TFD	460/3/60	12.6	85.0	2	1.2	20.0	30.0	—	—	—	—	10	25 (1)	31.3	40
BCH0076MEACE	2YA3R82K2-TFE	575/3/60	11.9	67.0	2	0.8	20.0	25.0	–	—	—	—	8	20 (1)	25.0	35
BCH0080MCACE	3YA3R99KE-TFC	208-230/3/60	36.8	215.0	2	2.2	50.4	80.0	—	—	—	—	20	70 (2)	87.5	100
BCH0080MDACE	3YA3R99KE-TFD	460/3/60	17.9	106.0	2	1.2	24.8	40.0	—	—	—	—	13	35 (1)	43.8	50
BCH0080MEACE	3YA3R99KE-TFE	575/3/60	14.7	84.0	2	0.8	20.0	30.0	—	—	—	—	10.4	28 (1)	35.0	45
BCH0100MCACE	3YB3R11ME-TFC	208-230/3/60	39.1	215.0	2	2.2	53.3	90.0	—	—	—	—	20	70 (2)	87.5	110
BCH0100MDACE	3YB3R11ME-TFD	460/3/60	17.9	106.0	2	1.2	24.8	40.0	—	—	—	—	13	35 (1)	43.8	50
BCH0100MEACE	3YB3R11ME-TFE	575/3/60	14.8	84.0	2	0.8	20.1	30.0	—	—	—	—	10.4	28 (1)	35.0	45
BCH0120MCACE	3YF3R14ME-TFC	208-230/3/60	43.2	275.0	2	2.2	58.4	100.0	—	—	—	—	20	70 (2)	87.5	110
BCH0120MDACE	3YF3R14ME-TFD	460/3/60	21.2	138.0	2	1.2	28.8	45.0	—	—	—	—	13	35 (1)	43.8	60
BCH0150MCACE	3YS3R16ME-TFC	208-230/3/60	53.5	275.0	2	4.4	75.7	125.0	15	70 (2)	90.7	125	20	80 (1)	100.0	125
BCH0150MDACE	3YS3R16ME-TFD	460/3/60	26.0	138.0	2	2.2	36.9	60.0	15	40 (1)	51.9	70	15	60 (2)	75.0	80
BCH0150MEACE	3YS3R16ME-TFE	575/3/60	21.2	110.0	2	1.7	29.8	50.0	12	32 (1)	41.8	60	12	48 (1)	60.0	60

Notes:
Per UL and NEC, RLA values have been calculated by dividing the Maximum Continuous Current (MCC) by 1.56.
† Unless otherwise noted, model is available for 50 Hz. Consult factory for details.
‡ = Number of defrost heater contactors in parentheses
^ = Two fan large units have ability for a reduced amp electric defrost kit (low amps). Confirm proper defrost kit prior to ordering or installing.

A1 ELECTRICAL DATA

Medium Temperature Models - Discus™ Compressors

Please consult AWEF table on page 62 and 63 to confirm DOE compliance per model

Model	Compressor	Power†	Compressor		Condenser		intelliGen™/ Beacon II		Remote Loads- Low Amps^				Remote Loads- High Amps^			
			RLA[c]	LRA	No. Fans	FLA (ea)	MCA	MOPD	Evap. Fan Amps	Defrost Htrs. Amps‡	Electric Defrost MCA	Electric Defrost MOPD	Evap. Fan Amps	Defrost Htrs. Amps‡	Electric Defrost MCA	Electric Defrost MOPD
BC*0050MCACD	2DC3R53KE-TFC	208-230/3/60	20.0	120.0	1	2.7	27.7	45.0	—	—	—	—	15	40(1)	50.0	60
BC*0050MDACD	2DC3R53KE-TFD	460/3/60	9.4	60.0	1	1.9	15.0	20.0	—	—	—	—	8	20(1)	25.0	30
BC*0050MEACD	2DC3R53KE-TFE	575/3/60	6.9	49.0	1	1.2	15.0	15.0	—	—	—	—	6.4	16(1)	20.0	20
BC*0051MCACD	2DD3R63KE-TFC	208-230/3/60	20.0	120.0	1	2.7	27.7	45.0	—	—	—	—	15	40(1)	50.0	60
BC*0051MDACD	2DD3R63KE-TFD	460/3/60	9.4	60.0	1	1.9	15.0	20.0	—	—	—	—	8	20(1)	25.0	30
BC*0051MEACD	2DD3R63KE-TFE	575/3/60	7.1	49.0	1	1.2	15.0	15.0	—	—	—	—	6.4	16(1)	20.0	20
BC*0075MCACD	2DL3R78KE-TFC	208-230/3/60	28.3	169.0	1	2.7	38.1	60.0	—	—	—	—	20	48(1)	60.0	80
BC*0075MDACD	2DL3R78KE-TFD	460/3/60	12.4	85.0	1	1.9	20.0	25.0	—	—	—	—	10	25(1)	31.3	35
BC*0075MEACD	2DL3R78KE-TFE	575/3/60	11.9	67.0	1	1.2	20.0	25.0	—	—	—	—	8	20(1)	25.0	35
BC*0076MCACD	2DA3R89KE-TFC	208-230/3/60	28.7	169.0	2	2.7	41.3	70.0	—	—	—	—	20	48(1)	61.3	90
BC*0076MDACD	2DA3R89KE-TFD	460/3/60	12.6	85.0	2	1.9	20.0	30.0	—	—	—	—	10	25(1)	31.3	40
BC*0076MEACD	2DA3R89KE-TFE	575/3/60	11.9	67.0	2	1.2	20.0	25.0	–	—	—	—	8	20(1)	25.3	35
BC*0080MCACD	3DA3R10ME-TFC	208-230/3/60	36.8	215.0	2	2.7	51.4	80.0	—	—	—	—	20	70(2)	87.5	100
BC*0080MDACD	3DA3R10ME-TFD	460/3/60	17.9	106.0	2	1.9	26.2	40.0	—	—	—	—	13	35(1)	43.8	50
BC*0080MEACD	3DA3R10ME-TFE	575/3/60	14.7	84.0	2	1.2	20.8	35.0	—	—	—	—	10.4	28(1)	35.0	45
BC*0100MCACD	3DB3R12ME-TFC	208-230/3/60	39.1	215.0	2	2.7	54.3	90.0	—	—	—	—	20	70(2)	87.5	110
BC*0100MDACD	3DB3R12ME-TFD	460/3/60	17.9	106.0	2	1.9	26.2	40.0	—	—	—	—	13	35(1)	43.8	50
BC*0100MEACD	3DB3R12ME-TFE	575/3/60	14.8	84.0	2	1.2	20.9	35.0	—	—	—	—	10.4	28(1)	35.0	45
BC*0120MCACD	3DF3R15ME-TFC	208-230/3/60	43.2	275.0	2	2.7	59.4	100.0	—	—	—	—	20	70(2)	87.5	110
BC*0120MDACD	3DF3R15ME-TFD	460/3/60	21.2	138.0	2	1.9	30.2	50.0	—	—	—	—	13	35(1)	43.8	60
BC*0150MCACD	3DS3R17ME-TFC	208-230/3/60	53.5	275.0	2	4.4	75.7	125.0	15	70(2)	90.7	125	20	80(2)	100.0	125
BC*0150MDACD	3DS3R17ME-TFD	460/3/60	26.0	138.0	2	2.2	36.9	60.0	15	40(1)	51.9	70	15	60(2)	75.0	80
BC*0150MEACD	3DS3R17ME-TFE	575/3/60	21.2	110.0	2	1.8	30.0	50.0	12	32(1)	42.0	60	12	48(1)	60.0	60

Notes:
* H = Outdoor, N = Indoor models only available as model Rev A
Per UL and NEC, RLA values have been calculated by dividing the Maximum Continuous Current (MCC) by 1.56.
† Unless otherwise noted, model is available for 50 Hz. Consult factory for details.
‡ = Number of defrost heater contactors in parentheses
^ = Two fan large units have ability for a reduced amp electric defrost kit (low amps). Confirm proper defrost kit prior to ordering or installing.

A1 ELECTRICAL DATA

Low Temperature Models - Discus™ Compressors

Please consult AWEF table on page 64 and 65 to confirm DOE compliance per model

Model	Compressor	Power†	Compressor		Condenser		intelliGen™/ Beacon II		Remote Loads- Low Amps^				Remote Loads- High Amps^			
			RLA[c]	LRA	No. Fans	FLA (ea)	MCA	MOPD	Evap. Fan Amps	Defrost Htrs. Amps‡	Electric Defrost MCA	Electric Defrost MOPD	Evap. Fan Amps	Defrost Htrs. Amps‡	Electric Defrost MCA	Electric Defrost MOPD
BC*0030LCBCD	2DF3F16KE-TFC	208-230/3/60	14.4	102.0	1	2.7	20.6	35.0	—	—	—	—	15	40(1)	50.0	50
BC*0030LDBCD	2DF3F16KE-TFD	460/3/60	7.1	52.0	1	1.9	15.0	15.0	—	—	—	—	8	20(1)	25.0	25
BC*0030LEBCD	2DF3F16KE-TFE	575/3/60	6.0	41.0	1	1.2	15.0	15.0	—	—	—	—	6.4	16(1)	20.0	20
BC*0040LCBCD	2DL3F20KE-TFC	208-230/3/60	23.6	161.0	1	2.7	32.2	50.0	—	—	—	—	15	48(1)	60.0	70
BC*0040LDBCD	2DL3F20KE-TFD	460/3/60	9.2	60.0	1	1.9	15.0	20.0	—	—	—	—	8	25(1)	31.3	35
BC*0040LEBCD	2DL3F20KE-TFE	575/3/60	6.9	49.0	1	1.2	15.0	15.0	—	—	—	—	6.4	20(1)	25.0	25
BC*0060LCBCD	2DB3F25KE-TFC	208-230/3/60	25.3	161.0	1	2.7	34.4	50.0	—	—	—	—	20	60(2)	75.0	80
BC*0060LDBCD	2DB3F25KE-TFD	460/3/60	11.9	80.0	1	1.9	20.0	25.0	—	—	—	—	10	30(1)	37.5	40
BC*0060LEBCD	2DB3F25KE-TFE	575/3/60	8.6	63.0	1	1.2	15.0	20.0	—	—	—	—	8	24(1)	30.0	30
BC*0061LCBCD	3DA3F28KE-TFC	208-230/3/60	24.0	150.0	1	2.7	32.7	50.0	—	—	—	—	20	60(2)	75.0	80
BC*0061LDBCD	3DA3F28KE-TFD	460/3/60	10.8	77.0	1	1.9	20.0	25.0	—	—	—	—	10	30(1)	37.5	40
BC*0061LEBCD	3DA3F28KE-TFE	575/3/60	9.4	62.0	1	1.2	15.0	20.0	—	—	—	—	8	24(1)	30.0	30
BC*0075LCBCD	3DB3F33KE-TFC	208-230/3/60	27.6	161.0	1	2.7	37.2	60.0	—	—	—	—	20	60(2)	75.0	80
BC*0075LDBCD	3DB3F33KE-TFD	460/3/60	14.1	83.0	1	1.9	20.0	30.0	—	—	—	—	10	30(1)	37.5	40
BC*0075LEBCD	3DB3F33KE-TFE	575/3/60	9.9	67.0	1	1.2	15.0	20.0	—	—	—	—	8	24(1)	30.0	30
BC*0090LCBCD	3DF3F40KE-TFC	208-230/3/60	33.2	215.0	2	2.7	46.9	80.0	—	—	—	—	20	70(2)	87.5	100
BC*0090LDBCD	3DF3F40KE-TFD	460/3/60	15.0	106.0	2	1.9	22.6	35.0	—	—	—	—	13	35(1)	43.8	50
BC*0090LEBCD	3DF3F40KE-TFE	575/3/60	14.1	84.0	2	1.2	20.0	30.0	—	—	—	—	10.4	28(1)	35.0	40
BC*0100LCBCD	3DS3F46KE-TFC	208-230/3/60	37.2	215.0	2	2.7	51.9	80.0	—	—	—	—	20	70(2)	87.5	100
BC*0100LDBCD	3DS3F46KE-TFD	460/3/60	16.7	106.0	2	1.9	24.6	40.0	—	—	—	—	13	35(1)	43.8	50
BC*0100LEBCD	3DS3F46KE-TFE	575/3/60	14.6	84.0	2	1.2	20.6	35.0	—	—	—	—	10.4	28(1)	35.0	45
BC*0120LCBCD	4DBNF54KE-TSK	208-230/3/60	46.0	220.0	2	4.4	66.3	110.0	15	40(1)	81.3	125	20	70(2)	87.5	125
BC*0120LDBCD	4DBNF54KE-TSK	460/3/60	23.0	110.0	2	2.2	33.2	50.0	15	25(1)	48.2	70	15	40(1)	50.0	70
BCH0120LEBCD	4DBNF54KE-TSE	575/3/60	15.6	106.0	2	3.4	22.9	35.0	12	20	34.9	50	12	32	40.0	50
BC*0150LCBCD	4DHNF63KE-TSK	208-230/3/60	47.2	278.0	2	4.4	67.8	110.0	15	48(1)	82.8	125	25	70(2)	92.8	125
BC*0150LDBCD	4DHNF63KE-TSK	460/3/60	23.6	139.0	2	2.2	33.9	50.0	15	25(1)	48.9	70	15	40(1)	50.0	70
BCH0150LEBCD	4DHNF63KE-TSE	575/3/60	18.8	113.0	2	3.4	26.9	45.0	12	20	38.9	50	12	32	40.0	50
BC*0220LCBCD	4DJNF76KE-TSK	208-230/3/60	57.7	374.0	2	4.4	80.9	125.0	15	48(1)	95.9	150	25	70(2)	105.9	150
BC*0220LDBCD	4DJNF76KE-TSK	460/3/60	28.8	187.0	2	2.2	40.5	60.0	15	25(1)	55.5	80	15	48(1)	60.0	80
BCH0220LEBCD	4DJN764KE-TSE	575/3/60	26.1	135.0	2	3.4	36.0	60.0	12	20	48.0	70	12	38	48.0	70

Notes:
* H = Outdoor, N = Indoor models only available as model Rev A
Per UL and NEC, RLA values have been calculated by dividing the Maximum Continuous Current (MCC) by 1.56.
† Unless otherwise noted, model is available for 50 Hz. Consult factory for details.
‡ = Number of defrost heater contactors in parentheses
^ = Two fan large units have ability for a reduced amp electric defrost kit (low amps). Confirm proper defrost kit prior to ordering or installing.

AWEF DATA – MEDIUM TEMPERATURE

Discus™ Compressor Models - Indoor/Outdoor

If model has a numerical value in the table below, the following statement applies:
This refrigeration system is designed and certified for use in walk-in cooler applications.

Model	Indoor					
	R-404A/R-507A	R-448A	R-449A	R-407A	R-407C	R-407F
BC*0050MCACD	5.61	5.61	5.61	5.61	5.61	5.61
BC*0050MDACD	5.61	5.61	5.61	5.61	5.61	5.61
BC*0050MEACD	5.61	5.61	5.61	5.61	5.61	5.61
BC*0051MCACD	5.61	5.61	5.61	5.61	5.61	5.61
BC*0051MDACD	5.61	5.61	5.61	5.61	5.61	5.61
BC*0051MEACD	5.61	5.61	5.61	5.61	5.61	5.61
BC*0075MCACD	5.61	5.61	5.61	5.61	5.61	5.61
BC*0075MDACD	5.61	5.61	5.61	5.61	5.61	5.61
BC*0075MEACD	5.61	5.61	5.61	5.61	5.61	5.61
BC*0076MCACD	5.61	5.61	5.61	5.61	5.61	5.61
BC*0076MDACD	5.61	5.61	5.61	5.61	5.61	5.61
BC*0076MEACD	5.61	5.61	5.61	5.61	5.61	5.61
BC*0080MCACD	5.61	5.61	5.61	5.61	5.61	5.61
BC*0080MDACD	5.61	5.61	5.61	5.61	5.61	5.61
BC*0080MEACD	5.61	5.61	5.61	5.61	5.61	5.61
BC*0100MCACD	5.61	5.61	5.61	5.61	5.61	5.61
BC*0100MDACD	5.61	5.61	5.61	5.61	5.61	5.61
BC*0100MEACD	5.61	5.61	5.61	5.61	5.61	5.61
BC*0120MCACD	—	5.61	5.61	—	5.61	5.61
BC*0120MDACD	—	5.61	5.61	—	5.61	5.61
BC*0120MEACD	X	X	X	X	X	X
BC*0150MCACD	—	5.61	5.61	5.61	5.61	5.61
BC*0150MDACD	—	5.61	5.61	5.61	5.61	5.61
BC*0150MEACD	—	5.61	5.61	5.61	5.61	5.61

Notes:
* H = Outdoor, N = Indoor models only available as model Rev A
X = model not suitable for this refrigerant
— = model is not DOE AWEF compliant
If model has a numerical value in the table, the following statement applies. "This refrigeration system is designed and certified for use in walk-in freezer applications."
= D for A1 Refrigerants, E for A2L Refrigerants

AWEF DATA – MEDIUM TEMPERATURE

Discus™ Compressor Models - Indoor/Outdoor (cont.)

If model has a numerical value in the table below, the following statement applies:
This refrigeration system is designed and certified for use in walk-in cooler applications.

Model	Outdoor								
	R-404A/R-507A	R-448A	R-449A	R-407A	R-407C	R-407F	R-454A	R-454C	R-455A
BC*0050MCAC#	7.60	7.60	7.60	7.60	7.60	7.60	7.60	7.60	7.60
BC*0050MDAC#	7.60	7.60	7.60	7.60	7.60	7.60	7.60	7.60	7.60
BC*0050MEAC#	7.60	7.60	7.60	7.60	7.60	7.60	7.60	7.60	7.60
BC*0051MCAC#	7.60	7.60	7.60	7.60	7.60	7.60	7.60	7.60	7.60
BC*0051MDAC#	7.60	7.60	7.60	7.60	7.60	7.60	7.60	7.60	7.60
BC*0051MEAC#	7.60	7.60	7.60	7.60	7.60	7.60	7.60	7.60	7.60
BC*0075MCAC#	7.60	7.60	7.60	7.60	7.60	7.60	7.60	7.60	7.60
BC*0075MDAC#	7.60	7.60	7.60	7.60	7.60	7.60	7.60	7.60	7.60
BC*0075MEAC#	7.60	7.60	7.60	7.60	7.60	7.60	7.60	7.60	7.60
BC*0076MCAC#	7.60	7.60	7.60	7.60	7.60	7.60	7.60	7.60	7.60
BC*0076MDAC#	7.60	7.60	7.60	7.60	7.60	7.60	7.60	7.60	7.60
BC*0076MEAC#	7.60	7.60	7.60	7.60	7.60	7.60	7.60	7.60	7.60
BC*0080MCAC#	7.60	7.60	7.60	7.60	7.60	7.60	7.60	7.60	7.60
BC*0080MDAC#	7.60	7.60	7.60	7.60	7.60	7.60	7.60	7.60	7.60
BC*0080MEAC#	7.60	7.60	7.60	7.60	7.60	7.60	7.60	7.60	7.60
BC*0100MCAC#	7.60	7.60	7.60	7.60	7.60	7.60	7.60	7.60	7.60
BC*0100MDAC#	7.60	7.60	7.60	7.60	7.60	7.60	7.60	7.60	7.60
BC*0100MEAC#	7.60	7.60	7.60	7.60	7.60	7.60	7.60	7.60	7.60
BC*0120MCAC#	7.60	7.60	7.60	7.60	7.60	7.60	7.60	7.60	7.60
BC*0120MDAC#	7.60	7.60	7.60	7.60	7.60	7.60	7.60	7.60	7.60
BC*0120MEAC#	X	X	X	X	X	X	X	X	X
BC*0150MCAC#	7.60	7.60	7.60	7.60	7.60	7.60	7.60	7.60	7.60
BC*0150MDAC#	7.60	7.60	7.60	7.60	7.60	7.60	7.60	7.60	7.60
BC*0150MEAC#	7.60	7.60	7.60	7.60	7.60	7.60	7.60	7.60	7.60

Notes:
* H = Outdoor, N = Indoor models only available as model Rev A
X = model not suitable for this refrigerant
— = model is not DOE AWEF compliant
If model has a numerical value in the table, the following statement applies. "This refrigeration system is designed and certified for use in walk-in freezer applications."
= D for A1 Refrigerants, E for A2L Refrigerants

AWEF DATA – LOW TEMPERATURE

Discus™ Compressor Models - Indoor/Outdoor

If model has a numerical value in the table below, the following statement applies:
This refrigeration system is designed and certified for use in walk-in freezer applications.

Model	Indoor					
	R-404A/R-507A	R-448A	R-449A	R-407A	R-407C	R-407F
BC*0030LCBCD	2.40	2.40	2.40	2.40	2.40	2.40
BC*0030LDBCD	2.40	2.40	2.40	2.40	2.40	2.40
BC*0030LEBCD	2.40	2.40	2.40	2.40	2.40	2.40
BC*0040LCBCD	2.40	2.40	2.40	2.40	2.40	2.40
BC*0040LDBCD	2.40	2.40	2.40	2.40	2.40	2.40
BC*0040LEBCD	2.40	2.40	2.40	2.40	2.40	2.40
BC*0060LCBCD	2.40	2.40	2.40	2.40	2.40	2.40
BC*0060LDBCD	2.40	2.40	2.40	2.40	2.40	2.40
BC*0060LEBCD	2.40	2.40	2.40	2.40	2.40	2.40
BC*0061LCBCD	2.40	2.40	2.40	—	2.40	2.40
BC*0061LDBCD	2.40	2.40	2.40	—	2.40	2.40
BC*0061LEBCD	2.40	2.40	2.40	—	2.40	2.40
BC*0075LCBCD	2.40	2.40	2.40	2.40	2.40	2.40
BC*0075LDBCD	2.40	2.40	2.40	2.40	2.40	2.40
BC*0075LEBCD	2.40	2.40	2.40	2.40	2.40	2.40
BC*0090LCBCD	2.40	2.40	2.40	2.40	2.40	2.40
BC*0090LDBCD	2.40	2.40	2.40	2.40	2.40	2.40
BC*0090LEBCD	2.40	2.40	2.40	2.40	2.40	2.40
BC*0100LCBCD	2.40	—	—	—	2.40	2.40
BC*0100LDBCD	2.40	—	—	—	2.40	2.40
BC*0100LEBCD	2.40	—	—	—	2.40	2.40
BC*0120LCBCD	2.40	2.40	2.40	2.40	2.40	2.40
BC*0120LDBCD	2.40	2.40	2.40	2.40	2.40	2.40
BC*0120LEBCD	—	—	—	—	—	—
BC*0150LCBCD	2.40	2.40	2.40	2.40	2.40	2.40
BC*0150LDBCD	2.40	2.40	2.40	2.40	2.40	2.40
BC*0150LEBCD	—	—	—	—	—	—
BC*0220LCBCD	2.40	2.40	2.40	2.40	2.40	2.40
BC*0220LDBCD	2.40	2.40	2.40	2.40	2.40	2.40
BC*0220LEBCD	—	—	—	—	—	—

Notes:
* H = Outdoor, N = Indoor models only available as model Rev A
X = model not suitable for this refrigerant
— = model is not DOE AWEF compliant
If model has a numerical value in the table, the following statement applies. "This refrigeration system is designed and certified for use in walk-in freezer applications."
= D for A1 Refrigerants, E for A2L Refrigerants

AWEF DATA – LOW TEMPERATURE

Discus™ Compressor Models - Indoor/Outdoor (cont.)

If model has a numerical value in the table below, the following statement applies:
This refrigeration system is designed and certified for use in walk-in freezer applications.

Model	Outdoor								
	R-404A/R-507A	R-448A	R-449A	R-407A	R-407C	R-407F	R-454A	R-454C	R-455A
BCH0030LCAC#	3.15	3.15	3.15	3.15	3.15	3.15	3.15	3.15	3.15
BCH0030LDAC#	3.15	3.15	3.15	3.15	3.15	3.15	3.15	3.15	3.15
BCH0030LEAC#	3.15	3.15	3.15	3.15	3.15	3.15	3.15	3.15	3.15
BCH0040LCAC#	3.15	3.15	3.15	3.15	3.15	3.15	3.15	3.15	3.15
BCH0040LDAC#	3.15	3.15	3.15	3.15	3.15	3.15	3.15	3.15	3.15
BCH0040LEAC#	3.15	3.15	3.15	3.15	3.15	3.15	3.15	3.15	3.15
BCH0060LCAC#	3.15	3.15	3.15	3.15	3.15	3.15	3.15	3.15	3.15
BCH0060LDAC#	3.15	3.15	3.15	3.15	3.15	3.15	3.15	3.15	3.15
BCH0060LEAC#	3.15	3.15	3.15	3.15	3.15	3.15	3.15	3.15	3.15
BCH0061LCAC#	3.15	3.15	3.15	3.15	3.15	3.15	3.15	3.15	3.15
BCH0061LDAC#	3.15	3.15	3.15	3.15	3.15	3.15	3.15	3.15	3.15
BCH0061LEAC#	3.15	3.15	3.15	3.15	3.15	3.15	3.15	3.15	3.15
BCH0075LCAC#	3.15	3.15	3.15	3.15	3.15	3.15	3.15	3.15	3.15
BCH0075LDAC#	3.15	3.15	3.15	3.15	3.15	3.15	3.15	3.15	3.15
BCH0075LEAC#	3.15	3.15	3.15	3.15	3.15	3.15	3.15	3.15	3.15
BCH0090LCAC#	3.15	3.15	3.15	3.15	3.15	3.15	3.15	3.15	3.15
BCH0090LDAC#	3.15	3.15	3.15	3.15	3.15	3.15	3.15	3.15	3.15
BCH0090LEAC#	3.15	3.15	3.15	3.15	3.15	3.15	3.15	3.15	3.15
BCH0100LCAC#	3.15	3.15	3.15	3.15	3.15	3.15	3.15	3.15	3.15
BCH0100LDAC#	3.15	3.15	3.15	3.15	3.15	3.15	3.15	3.15	3.15
BCH0100LEAC#	3.15	3.15	3.15	3.15	3.15	3.15	3.15	3.15	3.15
BCH0120LCAC#	3.15	3.15	3.15	3.15	3.15	3.15	3.15	3.15	3.15
BCH0120LDAC#	3.15	3.15	3.15	3.15	3.15	3.15	3.15	3.15	3.15
BCH0120LEAC#	—	—	—	—	—	—	3.15	3.15	3.15
BCH0150LCAC#	3.15	3.15	3.15	3.15	3.15	3.15	3.15	3.15	3.15
BCH0150LDAC#	3.15	3.15	3.15	3.15	3.15	3.15	3.15	3.15	3.15
BCH0150LEAC#	—	—	—	—	—	—	3.15	3.15	3.15
BCH0220LCAC#	3.15	3.15	3.15	3.15	3.15	3.15	3.15	3.15	3.15
BCH0220LDAC#	3.15	3.15	3.15	3.15	3.15	3.15	3.15	3.15	3.15
BCH0220LEAC#	—	—	—	—	—	—	—	—	—

Notes:
* H = Outdoor, N = Indoor models only available as model Rev A
X = model not suitable for this refrigerant
— = model is not DOE AWEF compliant
If model has a numerical value in the table, the following statement applies. "This refrigeration system is designed and certified for use in walk-in freezer applications."
= D for A1 Refrigerants, E for A2L Refrigerants

A2L PERFORMANCE DATA – R-454C

Medium Temperature Models - Semi-Hermetic Compressors

Please consult AWEF table on page 83 to confirm DOE compliance per model

R-454C		Capacity BTUH @ 90°F Ambient by SST									
Model	Compressor	+40°F	+35°F	+30°F	+25°F	+20°F	+15°F	+10°F	+5°F	+0°F	-10°F
BCH0056M^ABV	4EES-6Y	76,840	69,670	62,810	56,370	50,440	44,910	39,870	35,210	30,980	23,620
BCH0076M^ABV	4DES-7Y	87,990	79,650	71,810	64,400	57,640	51,300	45,510	40,190	35,310	26,880
BCH0091M^ABV	4CES-9Y	113,290	102,470	92,300	82,820	74,010	65,930	58,530	51,720	45,540	34,880
BCH0101M^ABV	4VES-10Y	115,710	104,150	93,300	83,150	73,790	65,260	57,400	50,220	43,760	-

R-454C		Capacity BTUH @ 95°F Ambient by SST									
Model	Compressor	+40°F	+35°F	+30°F	+25°F	+20°F	+15°F	+10°F	+5°F	+0°F	-10°F
BCH0056M^ABV	**4EES-6Y**	**73,880**	**66,970**	**60,340**	**54,090**	**48,360**	**43,070**	**38,170**	**33,660**	**29,580**	**22,490**
BCH0076M^ABV	**4DES-7Y**	**84,570**	**76,550**	**68,970**	**61,830**	**55,250**	**49,140**	**43,550**	**38,390**	**33,690**	**25,570**
BCH0091M^ABV	**4CES-9Y**	**109,040**	**98,600**	**88,720**	**79,630**	**71,100**	**63,280**	**56,120**	**49,540**	**43,560**	**33,250**
BCH0101M^ABV	**4VES-10Y**	**111,020**	**99,860**	**89,400**	**79,680**	**70,600**	**62,370**	**54,790**	**47,870**	**41,650**	**-**

R-454C		Capacity BTUH @ 100°F Ambient by SST									
Model	Compressor	+40°F	+35°F	+30°F	+25°F	+20°F	+15°F	+10°F	+5°F	+0°F	-10°F
BCH0056M^ABV	4EES-6Y	70,950	64,280	57,870	51,920	46,310	41,210	36,480	32,130	28,190	21,350
BCH0076M^ABV	4DES-7Y	81,190	73,450	66,140	59,240	52,890	47,000	41,600	36,620	32,090	24,260
BCH0091M^ABV	4CES-9Y	104,830	94,770	85,240	76,460	68,200	60,640	53,730	47,390	41,620	31,680
BCH0101M^ABV	4VES-10Y	106,350	95,610	85,490	76,110	67,410	59,470	52,180	45,520	39,520	-

R-454C		Capacity BTUH @ 110°F Ambient by SST									
Model	Compressor	+40°F	+35°F	+30°F	+25°F	+20°F	+15°F	+10°F	+5°F	+0°F	-10°F
BCH0056M^ABV	4EES-6Y	65,180	58,920	52,950	47,440	42,260	37,520	33,140	29,100	25,450	19,130
BCH0076M^ABV	4DES-7Y	74,470	67,310	60,500	54,150	48,250	42,780	37,770	33,140	28,940	21,700
BCH0091M^ABV	4CES-9Y	96,480	87,080	78,340	70,090	62,440	55,430	48,990	43,110	37,740	28,530
BCH0101M^ABV	4VES-10Y	97,060	87,080	77,870	69,100	61,050	53,730	46,990	40,830	35,320	-

Notes:

^ C = 208-230/3/60, D = 460/3/60, E = 575/3/60

A2L PERFORMANCE DATA – R-455A

Medium Temperature Models - Semi-Hermetic Compressors

Please consult AWEF table on page 83 to confirm DOE compliance per model

R-455A		Capacity BTUH @ 90°F Ambient by SST									
Model	Compressor	+40°F	+35°F	+30°F	+25°F	+20°F	+15°F	+10°F	+5°F	+0°F	-10°F
BCH0056M^ABV	4EES-6Y	80,290	72,660	65,470	58,690	52,390	46,610	41,270	36,400	31,950	24,240
BCH0076M^ABV	4DES-7Y	91,870	83,130	74,890	67,040	59,850	53,240	47,130	41,520	36,410	27,580
BCH0091M^ABV	4CES-9Y	118,070	106,730	96,050	86,040	76,830	68,360	60,560	53,450	46,970	35,800
BCH0101M^ABV	4VES-10Y	120,420	108,290	96,920	86,250	76,470	67,510	59,280	51,790	45,000	-

R-455A		Capacity BTUH @ 95°F Ambient by SST									
Model	Compressor	+40°F	+35°F	+30°F	+25°F	+20°F	+15°F	+10°F	+5°F	+0°F	-10°F
BCH0056M^ABV	**4EES-6Y**	**77,250**	**69,860**	**62,920**	**56,350**	**50,260**	**44,690**	**39,530**	**34,810**	**30,500**	**23,070**
BCH0076M^ABV	**4DES-7Y**	**88,400**	**79,930**	**71,950**	**64,400**	**57,440**	**51,030**	**45,110**	**39,690**	**34,750**	**26,220**
BCH0091M^ABV	**4CES-9Y**	**113,760**	**102,740**	**92,430**	**82,720**	**73,830**	**65,630**	**58,080**	**51,200**	**44,940**	**34,140**
BCH0101M^ABV	**4VES-10Y**	**115,550**	**103,830**	**92,890**	**82,600**	**73,120**	**64,460**	**56,520**	**49,310**	**42,780**	**-**

R-455A		Capacity BTUH @ 100°F Ambient by SST									
Model	Compressor	+40°F	+35°F	+30°F	+25°F	+20°F	+15°F	+10°F	+5°F	+0°F	-10°F
BCH0056M^ABV	4EES-6Y	74,210	67,100	60,370	54,020	48,170	42,770	37,790	33,230	29,080	21,900
BCH0076M^ABV	4DES-7Y	84,910	76,730	69,000	61,760	55,020	48,810	43,090	37,870	33,100	24,860
BCH0091M^ABV	4CES-9Y	109,410	98,820	88,800	79,480	70,830	62,900	55,610	48,970	42,930	32,500
BCH0101M^ABV	4VES-10Y	110,640	99,460	88,750	78,880	69,760	61,400	53,750	46,810	40,520	-

R-455A		Capacity BTUH @ 110°F Ambient by SST									
Model	Compressor	+40°F	+35°F	+30°F	+25°F	+20°F	+15°F	+10°F	+5°F	+0°F	-10°F
BCH0056M^ABV	4EES-6Y	68,170	61,610	55,290	49,460	44,000	38,970	34,340	30,100	26,250	19,600
BCH0076M^ABV	4DES-7Y	77,970	70,420	63,210	56,480	50,210	44,440	39,150	34,290	29,860	22,230
BCH0091M^ABV	4CES-9Y	100,770	90,920	81,640	72,960	64,940	57,560	50,770	44,580	38,960	29,300
BCH0101M^ABV	4VES-10Y	100,900	90,410	80,620	71,450	63,030	55,290	48,190	41,750	35,930	25,990

Notes:

^ C = 208-230/3/60, D = 460/3/60, E = 575/3/60

A1 PERFORMANCE DATA – R-404A/R-507A

Medium Temperature Models - Semi-Hermetic Compressors

Please consult AWEF table on page 83 to confirm DOE compliance per model

R-404A/R-507A		Capacity BTUH @ 90°F Ambient by SST									
Model	Compressor	+40°F	+35°F	+30°F	+25°F	+20°F	+15°F	+10°F	+5°F	+0°F	-10°F
BC*0056M@ABX	4EES-6	86,590	79,740	73,220	66,700	60,620	54,830	49,460	44,350	39,610	31,210
BC*0076M@ABX	4DES-7	103,230	95,180	87,350	79,900	72,530	65,710	59,250	53,300	47,690	37,730
BC*0091M@ABX	4CES-9	130,970	120,260	109,980	99,890	90,490	81,620	73,390	65,660	58,520	45,940
BC*0101M@ABX	4VES-10	136,530	125,260	114,510	103,830	93,750	84,280	75,520	67,280	59,660	46,230

R-404A/R-507A		Capacity BTUH @ 95°F Ambient by SST									
Model	Compressor	+40°F	+35°F	+30°F	+25°F	+20°F	+15°F	+10°F	+5°F	+0°F	-10°F
BC*0056M@ABX	**4EES-6**	**82,280**	**75,880**	**69,670**	**63,460**	**57,680**	**52,260**	**47,070**	**42,220**	**37,710**	**29,690**
BC*0076M@ABX	**4DES-7**	**98,290**	**90,690**	**83,240**	**76,150**	**69,220**	**62,640**	**56,560**	**50,810**	**45,460**	**35,930**
BC*0091M@ABX	**4CES-9**	**125,070**	**114,860**	**105,060**	**95,440**	**86,430**	**78,020**	**70,050**	**62,650**	**55,790**	**43,700**
BC*0101M@ABX	**4VES-10**	**130,000**	**119,280**	**109,010**	**98,750**	**89,180**	**80,260**	**71,790**	**63,900**	**56,600**	**43,690**

R-404A/R-507A		Capacity BTUH @ 100°F Ambient by SST									
Model	Compressor	+40°F	+35°F	+30°F	+25°F	+20°F	+15°F	+10°F	+5°F	+0°F	-10°F
BC*0056M@ABX	4EES-6	78,060	72,130	66,060	60,240	54,800	49,580	44,670	40,070	35,780	28,130
BC*0076M@ABX	4DES-7	93,340	86,140	79,090	72,300	65,730	59,540	53,780	48,300	43,210	34,130
BC*0091M@ABX	4CES-9	119,080	109,610	100,070	91,080	82,340	74,320	66,710	59,620	53,040	41,470
BC*0101M@ABX	4VES-10	123,410	113,260	103,450	93,880	84,630	76,130	68,060	60,530	53,520	41,200

R-404A/R-507A		Capacity BTUH @ 110°F Ambient by SST									
Model	Compressor	+40°F	+35°F	+30°F	+25°F	+20°F	+15°F	+10°F	+5°F	+0°F	-10°F
BC*0056M@ABX	4EES-6	69,480	64,150	58,760	53,690	48,820	44,200	39,820	35,710	31,870	25,000
BC*0076M@ABX	4DES-7	83,320	76,980	70,760	64,750	58,770	53,370	48,140	43,230	38,640	30,440
BC*0091M@ABX	4CES-9	106,950	98,480	90,020	81,800	74,160	66,860	59,970	53,510	47,560	37,010
BC*0101M@ABX	4VES-10	110,150	101,350	92,320	83,680	75,630	67,910	60,620	53,780	47,480	36,300

Notes:
* H = Outdoor, N = Indoor
@ C = 208-230/3/60, D = 460/3/60, E = 575/3/60

A1 PERFORMANCE DATA – R-448A/R-449A

Medium Temperature Models - Semi-Hermetic Compressors

Please consult AWEF table on page 83 to confirm DOE compliance per model

R-448A/R-449A		Capacity BTUH @ 90°F Ambient by SST									
Model	Compressor	+40°F	+35°F	+30°F	+25°F	+20°F	+15°F	+10°F	+5°F	+0°F	-10°F
BC*0056M@ABX	4EES-6	86,830	78,910	71,280	64,100	57,430	51,260	45,610	40,390	35,610	27,320
BC*0076M@ABX	4DES-7	101,730	92,350	83,520	75,030	67,270	60,030	53,390	47,270	41,670	31,910
BC*0091M@ABX	4CES-9	128,860	116,720	105,250	94,560	84,580	75,440	67,060	59,370	52,370	40,280
BC*0101M@ABX	4VES-10	134,350	121,660	109,420	97,990	87,330	77,550	68,630	60,430	52,960	40,090

R-448A/R-449A		Capacity BTUH @ 95°F Ambient by SST									
Model	Compressor	+40°F	+35°F	+30°F	+25°F	+20°F	+15°F	+10°F	+5°F	+0°F	-10°F
BC*0056M@ABX	**4EES-6**	**83,610**	**75,950**	**68,560**	**61,660**	**55,160**	**49,190**	**43,730**	**38,670**	**34,060**	**26,040**
BC*0076M@ABX	**4DES-7**	**97,870**	**88,830**	**80,290**	**72,110**	**64,580**	**57,570**	**51,160**	**45,200**	**39,810**	**30,400**
BC*0091M@ABX	**4CES-9**	**124,180**	**112,450**	**101,340**	**91,030**	**81,350**	**72,490**	**64,390**	**56,950**	**50,170**	**38,490**
BC*0101M@ABX	**4VES-10**	**129,050**	**116,800**	**104,970**	**93,960**	**83,640**	**74,280**	**65,590**	**57,660**	**50,470**	**38,040**

R-448A/R-449A		Capacity BTUH @ 100°F Ambient by SST									
Model	Compressor	+40°F	+35°F	+30°F	+25°F	+20°F	+15°F	+10°F	+5°F	+0°F	-10°F
BC*0056M@ABX	4EES-6	80,380	72,990	65,840	59,200	52,890	47,160	41,840	36,960	32,510	24,780
BC*0076M@ABX	4DES-7	94,010	85,310	77,070	69,240	61,890	55,120	48,920	43,200	37,980	28,900
BC*0091M@ABX	4CES-9	119,340	108,170	97,370	87,430	78,130	69,560	61,730	54,530	47,990	36,690
BC*0101M@ABX	4VES-10	123,760	111,950	100,540	89,860	79,960	70,940	62,570	54,930	47,990	36,020

R-448A/R-449A		Capacity BTUH @ 110°F Ambient by SST									
Model	Compressor	+40°F	+35°F	+30°F	+25°F	+20°F	+15°F	+10°F	+5°F	+0°F	-10°F
BC*0056M@ABX	4EES-6	74,030	67,050	60,370	54,180	48,380	43,080	38,130	33,590	29,460	22,280
BC*0076M@ABX	4DES-7	86,320	78,390	70,640	63,430	56,520	50,320	44,520	39,210	34,360	25,940
BC*0091M@ABX	4CES-9	110,110	99,630	89,730	80,370	71,710	63,810	56,470	49,760	43,680	33,180
BC*0101M@ABX	4VES-10	113,230	102,310	91,820	81,880	72,780	64,370	56,610	49,530	43,100	32,030

Notes:
* H = Outdoor, N = Indoor
@ C = 208-230/3/60, D = 460/3/60, E = 575/3/60

A1 PERFORMANCE DATA – R-407A/R-407F

Medium Temperature Models - Semi-Hermetic Compressors

Please consult AWEF table on page 88 to confirm DOE compliance per model

R-407A/R-407F		Capacity BTUH @ 90°F Ambient by SST									
Model	Compressor	+40°F	+35°F	+30°F	+25°F	+20°F	+15°F	+10°F	+5°F	+0°F	-10°F
BC*0056M@ABX	4EES-6	87,950	80,050	72,420	65,220	58,510	52,280	46,550	41,220	36,350	27,800
BC*0076M@ABX	4DES-7	102,770	93,490	84,750	76,300	68,510	61,130	54,420	48,180	42,460	32,440
BC*0091M@ABX	4CES-9	130,480	118,640	107,100	96,430	86,380	77,140	68,630	60,780	53,590	41,100
BC*0101M@ABX	4VES-10	134,730	122,280	110,300	99,100	88,650	78,920	69,980	61,670	54,050	40,720

R-407A/R-407F		Capacity BTUH @ 95°F Ambient by SST									
Model	Compressor	+40°F	+35°F	+30°F	+25°F	+20°F	+15°F	+10°F	+5°F	+0°F	-10°F
BC*0056M@ABX	**4EES-6**	**84,370**	**76,830**	**69,470**	**62,480**	**56,050**	**50,090**	**44,510**	**39,380**	**34,680**	**26,440**
BC*0076M@ABX	**4DES-7**	**98,580**	**89,670**	**81,220**	**73,010**	**65,510**	**58,460**	**52,000**	**45,990**	**40,480**	**30,800**
BC*0091M@ABX	**4CES-9**	**125,380**	**113,770**	**102,870**	**92,560**	**82,880**	**73,950**	**65,750**	**58,170**	**51,230**	**39,180**
BC*0101M@ABX	**4VES-10**	**129,140**	**117,030**	**105,700**	**94,800**	**84,730**	**75,430**	**66,720**	**58,720**	**51,380**	**38,520**

R-407A/R-407F		Capacity BTUH @ 100°F Ambient by SST									
Model	Compressor	+40°F	+35°F	+30°F	+25°F	+20°F	+15°F	+10°F	+5°F	+0°F	-10°F
BC*0056M@ABX	4EES-6	80,860	73,600	66,510	59,900	53,630	47,840	42,480	37,540	33,000	25,060
BC*0076M@ABX	4DES-7	94,410	85,840	77,720	69,860	62,590	55,820	49,600	43,810	38,500	29,190
BC*0091M@ABX	4CES-9	120,190	109,230	98,630	88,750	79,360	70,760	62,860	55,560	48,870	37,270
BC*0101M@ABX	4VES-10	123,500	112,060	100,980	90,650	80,810	71,850	63,480	55,770	48,710	36,340

R-407A/R-407F		Capacity BTUH @ 110°F Ambient by SST									
Model	Compressor	+40°F	+35°F	+30°F	+25°F	+20°F	+15°F	+10°F	+5°F	+0°F	-10°F
BC*0056M@ABX	4EES-6	73,830	67,140	60,560	54,420	48,670	43,410	38,460	33,880	29,700	22,370
BC*0076M@ABX	4DES-7	86,050	78,190	70,720	63,600	56,790	50,630	44,840	39,490	34,590	26,010
BC*0091M@ABX	4CES-9	110,160	99,910	90,110	80,970	72,370	64,490	57,140	50,380	44,200	33,470
BC*0101M@ABX	4VES-10	112,160	101,720	91,520	81,950	73,060	64,740	57,020	49,920	43,400	32,010

Notes:
* H = Outdoor, N = Indoor
@ C = 208-230/3/60, D = 460/3/60, E = 575/3/60
35°F Max Superheat

A1 PERFORMANCE DATA – R-407C

Medium Temperature Models - Semi-Hermetic Compressors

Please consult AWEF table on page 88 to confirm DOE compliance per model

R-407C		Capacity BTUH @ 90°F Ambient by SST									
Model	Compressor	+40°F	+35°F	+30°F	+25°F	+20°F	+15°F	+10°F	+5°F	+0°F	-10°F
BC*0056M@ABX	4EES-6	78,590	71,180	64,000	57,360	51,250	45,550	40,240	35,380	30,920	23,020
BC*0076M@ABX	4DES-7	92,790	84,080	75,890	68,110	60,840	54,170	47,930	42,210	36,990	27,660
BC*0091M@ABX	4CES-9	117,300	106,200	95,590	85,660	76,570	68,150	60,370	53,200	46,650	35,090
BC*0101M@ABX	4VES-10	122,430	110,830	99,540	89,230	79,670	70,810	62,570	55,020	48,080	35,740

R-407C		Capacity BTUH @ 95°F Ambient by SST									
Model	Compressor	+40°F	+35°F	+30°F	+25°F	+20°F	+15°F	+10°F	+5°F	+0°F	-10°F
BC*0056M@ABX	**4EES-6**	**75,620**	**68,350**	**61,550**	**55,100**	**49,150**	**43,660**	**38,540**	**33,850**	**29,560**	**21,910**
BC*0076M@ABX	**4DES-7**	**89,120**	**80,750**	**72,850**	**65,300**	**58,390**	**51,960**	**45,940**	**40,470**	**35,390**	**26,370**
BC*0091M@ABX	**4CES-9**	**112,850**	**102,150**	**91,980**	**82,370**	**73,620**	**65,500**	**57,960**	**51,070**	**44,750**	**33,570**
BC*0101M@ABX	**4VES-10**	**117,680**	**106,460**	**95,690**	**85,570**	**76,370**	**67,830**	**59,860**	**52,570**	**45,870**	**33,970**

R-407C		Capacity BTUH @ 100°F Ambient by SST									
Model	Compressor	+40°F	+35°F	+30°F	+25°F	+20°F	+15°F	+10°F	+5°F	+0°F	-10°F
BC*0056M@ABX	4EES-6	72,500	65,510	58,880	52,770	47,050	41,720	36,820	32,310	28,190	20,790
BC*0076M@ABX	4DES-7	85,480	77,430	69,730	62,560	55,930	49,700	43,940	38,670	33,790	25,090
BC*0091M@ABX	4CES-9	108,410	98,100	88,250	79,150	70,670	62,850	55,580	48,940	42,840	32,020
BC*0101M@ABX	4VES-10	112,920	102,080	91,710	82,010	73,060	64,820	57,120	50,110	43,700	32,210

R-407C		Capacity BTUH @ 110°F Ambient by SST									
Model	Compressor	+40°F	+35°F	+30°F	+25°F	+20°F	+15°F	+10°F	+5°F	+0°F	-10°F
BC*0056M@ABX	4EES-6	66,280	59,890	53,780	48,120	42,860	37,930	33,410	29,270	25,430	18,570
BC*0076M@ABX	4DES-7	78,220	70,910	63,760	57,200	51,020	45,250	39,950	35,050	30,570	22,490
BC*0091M@ABX	4CES-9	99,640	90,000	80,930	72,580	64,760	57,490	50,800	44,660	39,030	28,940
BC*0101M@ABX	4VES-10	103,530	93,190	83,560	74,710	66,410	58,700	51,630	45,150	39,250	28,650

Notes:
* H = Outdoor, N = Indoor
@ C = 208-230/3/60, D = 460/3/60, E = 575/3/60

A2L PERFORMANCE DATA – R-454C

Low Temperature Models - Semi-Hermetic Compressors

Please consult AWEF table on page 89 and 90 to confirm DOE compliance per model

R-454C		Capacity BTUH @ 90°F Ambient by SST								
Model	Compressor	+0°F	-5°F	-10°F	-15°F	-20°F	-25°F	-30°F	-35°F	-40°F
BCH0041L^ABV	4EES-4Y	30,090	26,380	23,020	19,910	17,090	14,520	-	-	-
BCH0056L^ABV	4DES-5Y	33,650	29,550	25,780	22,350	19,170	16,290	13,670	-	-
BCH0061L^ABV	4CES-6Y	44,360	38,960	34,000	29,500	25,380	21,650	-	-	-
BCH0062L^ABV	4VES-7Y	43,190	37,580	32,390	27,640	23,360	-	-	-	-
BCH0076L^ABV	4TES-9Y	51,930	45,330	39,360	33,860	28,820	24,240	-	-	-
BCH0101L^ABV	4PES-12Y	58,390	50,750	43,870	37,480	31,730	26,480	-	-	-
BCH0121L^ABV	4NES-14Y	71,970	62,740	54,310	46,580	39,600	33,290	-	-	-
BCH0131L^ABV	4JE-15Y	83,620	73,300	63,780	55,110	47,090	39,800	33,060	-	-

R-454C		Capacity BTUH @ 95°F Ambient by SST								
Model	Compressor	+0°F	-5°F	-10°F	-15°F	-20°F	-25°F	-30°F	-35°F	-40°F
BCH0041L^ABV	**4EES-4Y**	**28,700**	**25,130**	**21,910**	**18,900**	**16,180**	**13,710**	**-**	**-**	**-**
BCH0056L^ABV	**4DES-5Y**	**32,090**	**28,160**	**24,500**	**21,200**	**18,140**	**15,370**	**12,850**	**-**	**-**
BCH0061L^ABV	**4CES-6Y**	**42,410**	**37,210**	**32,420**	**28,080**	**24,120**	**20,510**	**-**	**-**	**-**
BCH0062L^ABV	**4VES-7Y**	**41,080**	**35,590**	**30,600**	**26,090**	**21,970**	**-**	**-**	**-**	**-**
BCH0076L^ABV	**4TES-9Y**	**49,390**	**43,060**	**37,320**	**31,990**	**27,190**	**22,780**	**-**	**-**	**-**
BCH0101L^ABV	**4PES-12Y**	**55,360**	**48,020**	**41,410**	**35,270**	**29,740**	**24,740**	**-**	**-**	**-**
BCH0121L^ABV	**4NES-14Y**	**68,460**	**59,560**	**51,450**	**44,020**	**37,330**	**31,290**	**-**	**-**	**-**
BCH0131L^ABV	**4JE-15Y**	**79,770**	**69,780**	**60,660**	**52,250**	**44,530**	**37,520**	**31,060**	**-**	**-**

R-454C		Capacity BTUH @ 100°F Ambient by SST								
Model	Compressor	+0°F	-5°F	-10°F	-15°F	-20°F	-25°F	-30°F	-35°F	-40°F
BCH0041L^ABV	4EES-4Y	27,340	23,900	20,790	17,900	15,290	12,910	-	-	-
BCH0056L^ABV	4DES-5Y	30,540	26,730	23,260	20,060	17,120	14,460	12,050	-	-
BCH0061L^ABV	4CES-6Y	40,480	35,470	30,860	26,680	22,860	19,410	-	-	-
BCH0062L^ABV	4VES-7Y	38,970	33,670	28,900	24,530	20,560	-	-	-	-
BCH0076L^ABV	4TES-9Y	46,970	40,830	35,310	30,220	25,570	21,350	-	-	-
BCH0101L^ABV	4PES-12Y	52,410	45,320	38,960	33,090	27,790	23,010	-	-	-
BCH0121L^ABV	4NES-14Y	64,940	56,400	48,610	41,480	35,070	29,300	-	-	-
BCH0131L^ABV	4JE-15Y	75,920	66,310	57,470	49,420	41,990	35,230	29,060	-	-

Notes:

^ C = 208-230/3/60, D = 460/3/60, E = 575/3/60

A2L PERFORMANCE DATA – R-454C

Low Temperature Models - Semi-Hermetic Compressors

Please consult AWEF table on page 89 and 90 to confirm DOE compliance per model

R-454C		Capacity BTUH @110°F Ambient by SST								
Model	Compressor	+0°F	-5°F	-10°F	-15°F	-20°F	-25°F	-30°F	-35°F	-40°F
BCH0041L^ABV	4EES-4Y	24,670	21,510	18,620	15,960	13,550	11,370	-	-	-
BCH0056L^ABV	4DES-5Y	27,540	24,000	20,800	17,830	15,130	12,690	-	-	-
BCH0061L^ABV	4CES-6Y	36,750	32,080	27,800	23,940	20,420	17,240	-	-	-
BCH0062L^ABV	4VES-7Y	34,860	29,960	25,540	21,510	17,870	-	-	-	-
BCH0076L^ABV	4TES-9Y	42,100	36,440	31,360	26,630	22,400	18,550	-	-	-
BCH0101L^ABV	4PES-12Y	46,520	40,090	34,210	28,810	23,970	19,630	-	-	-
BCH0121L^ABV	4NES-14Y	57,990	50,130	42,990	36,470	30,610	-	-	-	-
BCH0131L^ABV	4JE-15Y	68,500	59,470	51,330	43,840	36,970	30,750	25,100	-	-

Notes:

^ C = 208-230/3/60, D = 460/3/60, E = 575/3/60

A2L PERFORMANCE DATA – R-455A

Low Temperature Models - Semi-Hermetic Compressors

Please consult AWEF table on page 89 and 90 to confirm DOE compliance per model

R-455A		Capacity BTUH @ 90°F Ambient by SST								
Model	Compressor	+0°F	-5°F	-10°F	-15°F	-20°F	-25°F	-30°F	-35°F	-40°F
BCH0041L^ABV	4EES-4Y	31,150	27,280	23,740	20,480	17,520	14,830	-	-	-
BCH0056L^ABV	4DES-5Y	34,880	30,560	26,630	23,000	19,680	16,660	13,910	-	-
BCH0061L^ABV	4CES-6Y	45,990	40,290	35,120	30,370	26,080	22,170	-	-	-
BCH0062L^ABV	4VES-7Y	44,580	38,640	33,210	28,290	23,810	-	-	-	-
BCH0076L^ABV	4TES-9Y	53,710	46,820	40,530	34,790	29,530	24,780	20,480	-	-
BCH0101L^ABV	4PES-12Y	60,310	52,320	45,060	38,440	32,380	26,910	-	-	-
BCH0121L^ABV	4NES-14Y	74,220	64,590	55,800	47,750	40,490	33,910	-	-	-
BCH0131L^ABV	4JE-15Y	86,560	75,700	65,830	56,740	48,410	40,770	33,820	-	-

R-455A		Capacity BTUH @ 95°F Ambient by SST								
Model	Compressor	+0°F	-5°F	-10°F	-15°F	-20°F	-25°F	-30°F	-35°F	-40°F
BCH0041L^ABV	**4EES-4Y**	**29,740**	**26,000**	**22,570**	**19,440**	**16,580**	**13,990**	**-**	**-**	**-**
BCH0056L^ABV	**4DES-5Y**	**33,270**	**29,090**	**25,310**	**21,810**	**18,620**	**15,700**	**13,060**	**-**	**-**
BCH0061L^ABV	**4CES-6Y**	**44,000**	**38,500**	**33,490**	**28,910**	**24,770**	**21,010**	**-**	**-**	**-**
BCH0062L^ABV	**4VES-7Y**	**42,360**	**36,610**	**31,390**	**26,640**	**22,320**	**-**	**-**	**-**	**-**
BCH0076L^ABV	**4TES-9Y**	**51,070**	**44,420**	**38,390**	**32,830**	**27,810**	**23,260**	**19,130**	**-**	**-**
BCH0101L^ABV	**4PES-12Y**	**57,090**	**49,470**	**42,480**	**36,100**	**30,300**	**25,070**	**-**	**-**	**-**
BCH0121L^ABV	**4NES-14Y**	**70,530**	**61,220**	**52,760**	**45,050**	**38,050**	**31,740**	**-**	**-**	**-**
BCH0131L^ABV	**4JE-15Y**	**82,490**	**72,060**	**62,510**	**53,710**	**45,700**	**38,350**	**31,680**	**-**	**-**
BCH0131L^ABV	**4JE-15Y**	**79,770**	**69,780**	**60,660**	**52,250**	**44,530**	**37,520**	**31,060**	**-**	**-**

R-455A		Capacity BTUH @ 100°F Ambient by SST								
Model	Compressor	+0°F	-5°F	-10°F	-15°F	-20°F	-25°F	-30°F	-35°F	-40°F
BCH0041L^ABV	4EES-4Y	28,340	24,730	21,430	18,410	15,660	13,170	-	-	-
BCH0056L^ABV	4DES-5Y	31,670	27,670	24,000	20,630	17,570	14,770	12,240	-	-
BCH0061L^ABV	4CES-6Y	42,010	36,710	31,880	27,470	23,480	19,860	-	-	-
BCH0062L^ABV	4VES-7Y	40,140	34,600	29,570	24,990	20,860	-	-	-	-
BCH0076L^ABV	4TES-9Y	48,430	42,070	36,240	30,910	26,080	21,700	17,760	-	-
BCH0101L^ABV	4PES-12Y	53,970	46,590	39,890	33,770	28,200	23,190	-	-	-
BCH0121L^ABV	4NES-14Y	66,790	57,810	49,690	42,300	35,620	29,600	-	-	-
BCH0131L^ABV	4JE-15Y	78,430	68,370	59,170	50,700	42,970	35,920	29,480	-	-

Notes:

^ C = 208-230/3/60, D = 460/3/60, E = 575/3/60

A2L PERFORMANCE DATA – R-455A

Low Temperature Models - Semi-Hermetic Compressors

Please consult AWEF table on page 89 and 90 to confirm DOE compliance per model

R-455A		Capacity BTUH @110°F Ambient by SST								
Model	Compressor	+0°F	-5°F	-10°F	-15°F	-20°F	-25°F	-30°F	-35°F	-40°F
BCH0041L^ABV	4EES-4Y	25,580	22,250	19,190	16,400	13,870	11,570	-	-	-
BCH0056L^ABV	4DES-5Y	28,560	24,850	21,460	18,350	15,520	12,960	10,630	-	-
BCH0061L^ABV	4CES-6Y	38,130	33,210	28,740	24,670	20,980	17,650	14,660	-	-
BCH0062L^ABV	4VES-7Y	35,760	30,620	25,970	21,740	17,930	-	-	-	-
BCH0076L^ABV	4TES-9Y	43,250	37,330	31,950	27,040	22,610	18,600	14,980	-	-
BCH0101L^ABV	4PES-12Y	47,660	40,880	34,710	29,110	24,050	19,470	-	-	-
BCH0121L^ABV	4NES-14Y	59,260	51,050	43,590	36,800	30,700	25,220	-	-	-
BCH0131L^ABV	4JE-15Y	70,390	61,060	52,510	44,650	37,510	31,000	25,090	-	-

Notes:

^ C = 208-230/3/60, D = 460/3/60, E = 575/3/60

A1 PERFORMANCE DATA – R-404A/R-507A

Low Temperature Models - Semi-Hermetic Compressors

Please consult AWEF table on page 89 and 90 to confirm DOE compliance per model

R-404A/R-507A		Capacity BTUH @ 90°F Ambient by SST								
Model	Compressor	+0°F	-5°F	-10°F	-15°F	-20°F	-25°F	-30°F	-35°F	-40°F
BC*0041L@BBX	4EES-4	36,520	32,870	29,430	26,160	23,060	20,250	17,630	15,200	12,940
BC*0056L@BBX	4DES-5	43,240	38,970	34,810	30,930	27,370	24,030	20,950	18,070	15,390
BC*0061L@BBX	4CES-6	54,020	48,340	42,940	37,970	33,350	29,110	25,190	21,590	18,280
BC*0062L@BBX	4VES-7	54,370	48,410	42,710	37,500	32,640	28,110	24,010	20,230	16,780
BC*0076L@BBX	4TES-9	66,300	59,220	52,450	46,320	40,580	35,260	30,340	25,820	21,640
BC*0101L@BBX	4PES-12	74,260	66,200	58,430	51,390	44,770	38,590	32,970	27,790	23,040
BC*0121L@BBX	4NES-14	93,290	82,960	73,480	64,610	56,430	48,890	41,970	35,660	29,870
BC*0131L@BBX	4JE-15	106,830	95,800	85,310	75,320	66,230	57,690	49,780	42,400	35,590

R-404A/R-507A		Capacity BTUH @ 95°F Ambient by SST								
Model	Compressor	+0°F	-5°F	-10°F	-15°F	-20°F	-25°F	-30°F	-35°F	-40°F
BC*0041L@BBX	**4EES-4**	**34,650**	**31,190**	**27,910**	**24,790**	**21,910**	**19,210**	**16,710**	**14,370**	**12,220**
BC*0056L@BBX	**4DES-5**	**41,050**	**36,990**	**33,060**	**29,350**	**25,970**	**22,790**	**19,840**	**17,090**	**14,540**
BC*0061L@BBX	**4CES-6**	**51,380**	**45,930**	**40,770**	**36,020**	**31,620**	**27,550**	**23,790**	**20,360**	**17,190**
BC*0062L@BBX	**4VES-7**	**51,480**	**45,690**	**40,320**	**35,360**	**30,720**	**26,390**	**22,470**	**18,850**	**15,560**
BC*0076L@BBX	**4TES-9**	**62,850**	**56,050**	**49,640**	**43,810**	**38,320**	**33,240**	**28,530**	**24,200**	**20,230**
BC*0101L@BBX	**4PES-12**	**70,300**	**62,390**	**55,180**	**48,370**	**41,990**	**36,140**	**30,790**	**25,870**	**21,320**
BC*0121L@BBX	**4NES-14**	**88,320**	**78,520**	**69,530**	**61,070**	**53,220**	**45,990**	**39,420**	**33,390**	**27,860**
BC*0131L@BBX	**4JE-15**	**101,480**	**90,960**	**80,850**	**71,480**	**62,670**	**54,470**	**46,920**	**39,830**	**33,300**

R-404A/R-507A		Capacity BTUH @ 100°F Ambient by SST								
Model	Compressor	+0°F	-5°F	-10°F	-15°F	-20°F	-25°F	-30°F	-35°F	-40°F
BC*0041L@BBX	4EES-4	32,750	29,540	26,380	23,430	20,720	18,150	15,780	13,550	11,490
BC*0056L@BBX	4DES-5	38,850	34,930	31,250	27,810	24,560	21,540	18,740	16,110	13,690
BC*0061L@BBX	4CES-6	48,720	43,500	38,580	34,090	29,880	26,000	22,410	19,140	16,120
BC*0062L@BBX	4VES-7	48,600	43,080	38,030	33,250	28,770	24,680	20,940	17,520	14,370
BC*0076L@BBX	4TES-9	59,350	52,880	46,930	41,300	36,070	31,180	26,730	22,610	18,820
BC*0101L@BBX	4PES-12	66,150	58,650	51,840	45,360	39,270	33,710	28,610	23,940	19,620
BC*0121L@BBX	4NES-14	83,530	74,200	65,550	57,390	49,960	43,130	36,880	31,130	25,890
BC*0131L@BBX	4JE-15	96,130	85,960	76,440	67,540	59,050	51,300	44,010	37,280	31,030

Notes:
* H = Outdoor, N = Indoor models only available as model Rev A
@ C = 208-230/3/60, D = 460/3/60, E = 575/3/60

A1 PERFORMANCE DATA – R-404A/R-507A

Low Temperature Models - Semi-Hermetic Compressors (cont.)

Please consult AWEF table on page 89 and 90 to confirm DOE compliance per model

R-404A/R-507A		Capacity BTUH @ 110°F Ambient by SST								
Model	Compressor	+0°F	-5°F	-10°F	-15°F	-20°F	-25°F	-30°F	-35°F	-40°F
BC*0041L@BBX	4EES-4	28,940	26,100	23,320	20,750	18,310	16,020	13,870	11,880	10,040
BC*0056L@BBX	4DES-5	34,410	30,950	27,680	24,630	21,740	19,030	16,500	14,160	11,980
BC*0061L@BBX	4CES-6	43,450	38,680	34,350	30,250	26,450	22,910	19,700	16,740	14,040
BC*0062L@BBX	4VES-7	42,910	37,910	33,390	29,080	25,020	21,330	17,950	14,860	12,020
BC*0076L@BBX	4TES-9	52,520	46,670	41,390	36,320	31,560	27,190	23,170	19,460	16,060
BC*0101L@BBX	4PES-12	57,920	51,410	45,240	39,320	33,920	28,930	24,390	20,180	16,280
BC*0121L@BBX	4NES-14	73,450	65,330	57,460	50,250	43,570	37,420	31,800	26,670	21,940
BC*0131L@BBX	4JE-15	85,490	76,290	67,800	59,590	52,070	44,920	38,360	32,250	26,570

Notes:
* H = Outdoor, N = Indoor models only available as model Rev A
@ C = 208-230/3/60, D = 460/3/60, E = 575/3/60

A1 PERFORMANCE DATA – R-448A/R-449A

Low Temperature Models - Semi-Hermetic Compressors

Please consult AWEF table on page 89 and 90 to confirm DOE compliance per model

R-448A/R-449A		Capacity BTUH @ 90°F Ambient by SST								
Model	Compressor	+0°F	-5°F	-10°F	-15°F	-20°F	-25°F	-30°F	-35°F	-40°F
BC*0041L@BBX	4EES-4	33,130	29,210	25,580	22,270	19,240	16,440	13,880	11,540	9,380
BC*0056L@BBX	4DES-5	38,760	34,170	29,900	26,050	22,480	19,190	16,210	13,460	10,930
BC*0061L@BBX	4CES-6	49,410	43,510	38,090	33,190	28,690	24,580	20,860	17,440	14,300
BC*0062L@BBX	4VES-7	49,350	43,170	37,490	32,310	27,550	23,270	19,400	15,840	12,560
BC*0076L@BBX	4TES-9	60,470	53,220	46,550	40,370	34,730	29,550	24,880	20,590	16,670
BC*0101L@BBX	4PES-12	67,540	59,170	51,530	44,430	37,900	32,010	26,670	21,820	17,320
BC*0121L@BBX	4NES-14	84,510	73,940	64,520	55,820	47,940	40,740	34,250	28,350	22,940
BC*0131L@BBX	4JE-15	97,990	86,270	75,590	65,780	56,710	48,410	40,780	33,740	27,260

R-448A/R-449A		Capacity BTUH @ 95°F Ambient by SST								
Model	Compressor	+0°F	-5°F	-10°F	-15°F	-20°F	-25°F	-30°F	-35°F	-40°F
BC*0041L@BBX	**4EES-4**	**31,680**	**27,820**	**24,350**	**21,160**	**18,240**	**15,560**	**13,090**	**10,840**	**8,780**
BC*0056L@BBX	**4DES-5**	**36,980**	**32,530**	**28,480**	**24,730**	**21,300**	**18,140**	**15,270**	**12,640**	**10,220**
BC*0061L@BBX	**4CES-6**	**47,280**	**41,610**	**36,390**	**31,630**	**27,290**	**23,330**	**19,750**	**16,470**	**13,470**
BC*0062L@BBX	**4VES-7**	**46,960**	**40,950**	**35,540**	**30,550**	**25,970**	**21,850**	**18,130**	**14,720**	**—**
BC*0076L@BBX	**4TES-9**	**57,720**	**50,650**	**44,260**	**38,320**	**32,900**	**27,910**	**23,420**	**19,320**	**—**
BC*0101L@BBX	**4PES-12**	**64,220**	**56,060**	**48,720**	**41,920**	**35,650**	**29,990**	**24,910**	**20,230**	**—**
BC*0121L@BBX	**4NES-14**	**80,400**	**70,440**	**61,300**	**52,930**	**45,310**	**38,430**	**32,190**	**26,530**	**—**
BC*0131L@BBX	**4JE-15**	**93,680**	**82,490**	**72,050**	**62,580**	**53,820**	**45,810**	**38,430**	**31,640**	**—**

R-448A/R-449A		Capacity BTUH @ 100°F Ambient by SST								
Model	Compressor	+0°F	-5°F	-10°F	-15°F	-20°F	-25°F	-30°F	-35°F	-40°F
BC*0041L@BBX	4EES-4	30,200	26,530	23,120	20,070	17,260	14,670	12,310	10,160	8,190
BC*0056L@BBX	4DES-5	35,220	30,940	27,050	23,440	20,100	17,090	14,350	11,840	9,510
BC*0061L@BBX	4CES-6	45,170	39,660	34,670	30,090	25,920	22,100	18,670	15,520	12,650
BC*0062L@BBX	4VES-7	44,600	38,800	33,620	28,780	24,410	20,440	16,880	13,590	—
BC*0076L@BBX	4TES-9	54,960	48,140	42,000	36,290	31,040	26,280	21,960	18,030	—
BC*0101L@BBX	4PES-12	60,880	53,050	45,950	39,370	33,410	27,990	23,130	18,640	—
BC*0121L@BBX	4NES-14	76,380	66,830	58,060	50,030	42,710	36,110	30,140	24,710	—
BC*0131L@BBX	4JE-15	89,360	78,500	68,590	59,390	50,940	43,160	36,090	29,550	—

Notes:
* H = Outdoor, N = Indoor models only available as model Rev A
@ C = 208-230/3/60, D = 460/3/60, E = 575/3/60
35°F Max Superheat

A1 PERFORMANCE DATA – R-448A/R-449A

Low Temperature Models - Semi-Hermetic Compressors (cont.)

Please consult AWEF table on page 89 and 90 to confirm DOE compliance per model

R-448A/R-449A		Capacity BTUH @ 110°F Ambient by SST								
Model	Compressor	+0°F	-5°F	-10°F	-15°F	-20°F	-25°F	-30°F	-35°F	-40°F
BC*0041L@BBX	4EES-4	27,280	23,870	20,780	17,940	15,330	12,960	10,800	8,840	7,040
BC*0056L@BBX	4DES-5	31,760	27,810	24,230	20,900	17,830	15,060	12,550	10,260	8,130
BC*0061L@BBX	4CES-6	41,000	35,910	31,320	27,080	23,190	19,700	16,550	13,680	11,040
BC*0062L@BBX	4VES-7	40,020	34,690	29,810	25,360	21,330	17,720	14,430	—	—
BC*0076L@BBX	4TES-9	49,440	43,260	37,550	32,290	27,440	23,060	19,120	—	—
BC*0101L@BBX	4PES-12	54,000	47,010	40,430	34,440	29,000	24,090	19,640	—	—
BC*0121L@BBX	4NES-14	68,450	59,640	51,600	44,180	37,510	31,460	26,050	—	—
BC*0131L@BBX	4JE-15	80,770	70,740	61,590	53,060	45,240	38,020	—	—	—

Notes:
* H = Outdoor, N = Indoor models only available as model Rev A
@ C = 208-230/3/60, D = 460/3/60, E = 575/3/60
35°F Max Superheat

A1 PERFORMANCE DATA – R-407A/R-407F

Low Temperature Models - Semi-Hermetic Compressors

Please consult AWEF table on page 89 and 90 to confirm DOE compliance per model

R-407A/R-407F		Capacity BTUH @ 90°F Ambient by SST								
Model	Compressor	+0°F	-5°F	-10°F	-15°F	-20°F	-25°F	-30°F	-35°F	-40°F
BC*0041L@BBX	4EES-4	33,410	29,470	25,770	22,380	19,260	16,380	13,700	11,250	8,990
BC*0056L@BBX	4DES-5	39,090	34,430	30,100	26,150	22,480	19,090	15,970	13,110	10,450
BC*0061L@BBX	4CES-6	50,060	44,050	38,550	33,520	28,870	24,610	20,710	17,130	13,830
BC*0062L@BBX	4VES-7 †	49,850	43,610	37,800	32,470	27,510	22,990	18,860	15,080	11,550
BC*0076L@BBX	4TES-9 †	61,910	54,460	47,610	41,220	35,330	29,850	24,840	20,210	15,950
BC*0101L@BBX	4PES-12 †	69,060	60,430	52,590	45,230	38,380	32,110	26,360	21,090	16,180
BC*0121L@BBX	4NES-14 †	85,770	75,060	65,360	56,340	48,050	40,410	33,460	27,050	21,170
BC*0131L@BBX	4JE-15 †	94,760	83,130	72,200	62,040	52,620	43,890	35,760	28,170	21,100

R-407A/R-407F		Capacity BTUH @ 95°F Ambient by SST								
Model	Compressor	+0°F	-5°F	-10°F	-15°F	-20°F	-25°F	-30°F	-35°F	-40°F
BC*0041L@BBX	**4EES-4**	**31,820**	**27,970**	**24,450**	**21,210**	**18,210**	**15,440**	**12,880**	**10,530**	**8,370**
BC*0056L@BBX	**4DES-5**	**37,180**	**32,750**	**28,590**	**24,760**	**21,230**	**17,960**	**14,990**	**12,250**	**9,720**
BC*0061L@BBX	**4CES-6**	**47,780**	**42,050**	**36,690**	**31,860**	**27,390**	**23,280**	**19,550**	**16,120**	**12,970**
BC*0062L@BBX	**4VES-7 †**	**47,280**	**41,200**	**35,710**	**30,590**	**25,820**	**21,490**	**17,560**	**13,920**	**10,550**
BC*0076L@BBX	**4TES-9 †**	**58,850**	**51,740**	**45,200**	**39,060**	**33,390**	**28,130**	**23,330**	**18,900**	**14,820**
BC*0101L@BBX	**4PES-12 †**	**65,400**	**57,190**	**49,680**	**42,610**	**36,020**	**30,010**	**24,500**	**19,470**	**14,770**
BC*0121L@BBX	**4NES-14 †**	**81,540**	**71,290**	**62,000**	**53,320**	**45,350**	**38,020**	**31,360**	**25,220**	**19,610**
BC*0131L@BBX	**4JE-15 †**	**90,140**	**78,830**	**68,410**	**58,650**	**49,600**	**41,170**	**33,420**	**26,160**	**19,420**

R-407A/R-407F		Capacity BTUH @ 100°F Ambient by SST								
Model	Compressor	+0°F	-5°F	-10°F	-15°F	-20°F	-25°F	-30°F	-35°F	-40°F
BC*0041L@BBX	4EES-4	30,240	26,550	23,160	20,050	17,170	14,500	12,060	9,820	7,760
BC*0056L@BBX	4DES-5	35,300	30,990	27,060	23,380	20,000	16,860	14,020	11,400	8,990
BC*0061L@BBX	4CES-6	45,520	39,960	34,910	30,220	25,930	21,980	18,410	15,130	12,120
BC*0062L@BBX	4VES-7 †	44,730	38,890	33,640	28,670	24,140	20,000	16,250	12,780	9,560
BC*0076L@BBX	4TES-9 †	55,980	49,070	42,810	36,920	31,480	26,430	21,840	17,600	13,710
BC*0101L@BBX	4PES-12 †	61,950	54,070	46,780	39,940	33,690	27,930	22,710	17,880	13,400
BC*0121L@BBX	4NES-14 †	77,390	67,670	58,660	50,320	42,630	35,650	29,280	23,440	18,070
BC*0131L@BBX	4JE-15 †	85,460	74,650	64,680	55,310	46,620	38,540	31,120	24,220	17,780

Notes:
N = Indoor models only available as model Rev A
† Liquid Injection via CIC is required at all operating conditions
* H = Outdoor, N = Indoor
@ C = 208-230/3/60, D = 460/3/60, E = 575/3/60
35°F Max Superheat

A1 PERFORMANCE DATA – R-407A/R-407F

Low Temperature Models - Semi-Hermetic Compressors (cont.)

Please consult AWEF table on page 89 and 90 to confirm DOE compliance per model

R-407A/R-407F		Capacity BTUH @ 110°F Ambient by SST								
Model	Compressor	+0°F	-5°F	-10°F	-15°F	-20°F	-25°F	-30°F	-35°F	-40°F
BC*0041L@BBX	4EES-4	27,150	23,750	20,660	17,780	15,140	12,690	10,460	8,420	6,570
BC*0056L@BBX	4DES-5	31,620	27,640	24,060	20,690	17,560	14,720	12,130	9,760	7,580
BC*0061L@BBX	4CES-6	41,030	35,950	31,320	27,010	23,060	19,440	16,180	13,190	10,470
BC*0062L@BBX	4VES-7 †	39,670	34,430	29,570	25,000	20,870	17,120	13,700	10,540	—
BC*0076L@BBX	4TES-9 †	50,080	43,880	38,080	32,680	27,670	23,090	18,910	15,080	11,550
BC*0101L@BBX	4PES-12 †	54,900	47,780	41,100	34,830	29,120	23,880	19,140	14,760	10,760
BC*0121L@BBX	4NES-14 †	69,210	60,340	52,060	44,420	37,380	31,010	25,210	19,920	15,060
BC*0131L@BBX	4JE-15 †	76,690	66,650	57,400	48,790	40,770	33,430	26,680	20,420	14,590

Notes:
N = Indoor models only available as model Rev A
† Liquid Injection via CIC is required at all operating conditions
* H = Outdoor, N = Indoor
@ C = 208-230/3/60, D = 460/3/60, E = 575/3/60
35°F Max Superheat

A1 PERFORMANCE DATA – R-407C

Low Temperature Models - Semi-Hermetic Compressors

Please consult AWEF table on page 89 and 90 to confirm DOE compliance per model

R-407C		Capacity BTUH @ 90°F Ambient by SST								
Model	Compressor	+0°F	-5°F	-10°F	-15°F	-20°F	-25°F	-30°F	-35°F	-40°F
BC*0041L@BBX	4EES-4	28,800	25,110	21,810	—	—	—	—	—	—
BC*0056L@BBX	4DES-5	34,550	30,230	26,250	—	—	—	—	—	—
BC*0061L@BBX	4CES-6	43,930	38,490	33,460	—	—	—	—	—	—
BC*0062L@BBX	4VES-7	44,730	39,060	33,730	—	—	—	—	—	—
BC*0076L@BBX	4TES-9	54,800	48,040	41,710	—	—	—	—	—	—
BC*0101L@BBX	4PES-12	61,030	53,250	45,890	—	—	—	—	—	—
BC*0121L@BBX	4NES-14	75,480	65,850	56,920	—	—	—	—	—	—
BC*0131L@BBX	4JE-15	82,820	71,830	61,740	—	—	—	—	—	—

R-407C		Capacity BTUH @ 95°F Ambient by SST								
Model	Compressor	+0°F	-5°F	-10°F	-15°F	-20°F	-25°F	-30°F	-35°F	-40°F
BC*0041L@BBX	**4EES-4**	**27,470**	**23,940**	**20,700**	**—**	**—**	**—**	**—**	**—**	**—**
BC*0056L@BBX	**4DES-5**	**32,980**	**28,830**	**24,990**	**—**	**—**	**—**	**—**	**—**	**—**
BC*0061L@BBX	**4CES-6**	**42,100**	**36,820**	**31,950**	**—**	**—**	**—**	**—**	**—**	**—**
BC*0062L@BBX	**4VES-7**	**42,580**	**37,140**	**31,990**	**—**	**—**	**—**	**—**	**—**	**—**
BC*0076L@BBX	**4TES-9**	**52,280**	**45,730**	**39,690**	**—**	**—**	**—**	**—**	**—**	**—**
BC*0101L@BBX	**4PES-12**	**58,060**	**50,440**	**43,500**	**—**	**—**	**—**	**—**	**—**	**—**
BC*0121L@BBX	**4NES-14**	**72,000**	**62,730**	**54,120**	**—**	**—**	**—**	**—**	**—**	**—**
BC*0131L@BBX	**4JE-15**	**78,850**	**68,300**	**58,450**	**—**	**—**	**—**	**—**	**—**	**—**

R-407C		Capacity BTUH @ 100°F Ambient by SST								
Model	Compressor	+0°F	-5°F	-10°F	-15°F	-20°F	-25°F	-30°F	-35°F	-40°F
BC*0041L@BBX	4EES-4	26,100	22,730	19,600	—	—	—	—	—	—
BC*0056L@BBX	4DES-5	31,370	27,430	23,720	—	—	—	—	—	—
BC*0061L@BBX	4CES-6	40,180	35,140	30,430	—	—	—	—	—	—
BC*0062L@BBX	4VES-7	40,430	35,140	30,290	—	—	—	—	—	—
BC*0076L@BBX	4TES-9	49,830	43,540	37,670	—	—	—	—	—	—
BC*0101L@BBX	4PES-12	55,040	47,670	41,030	—	—	—	—	—	—
BC*0121L@BBX	4NES-14	68,510	59,510	51,310	—	—	—	—	—	—
BC*0131L@BBX	4JE-15	74,950	64,790	55,250	—	—	—	—	—	—

Notes:
N = Indoor models only available as model Rev A
* H = Outdoor, N = Indoor
@ C = 208-230/3/60, D = 460/3/60, E = 575/3/60
35°F Max Superheat

A1 PERFORMANCE DATA – R-407C

Low Temperature Models - Semi-Hermetic Compressors (cont.)

Please consult AWEF table on page 89 and 90 to confirm DOE compliance per model

R-407C		Capacity BTUH @ 110°F Ambient by SST								
Model	Compressor	+0°F	-5°F	-10°F	-15°F	-20°F	-25°F	-30°F	-35°F	-40°F
BC*0041L@BBX	4EES-4	23,450	20,290	—	—	—	—	—	—	—
BC*0056L@BBX	4DES-5	28,300	24,580	—	—	—	—	—	—	—
BC*0061L@BBX	4CES-6	36,470	31,720	—	—	—	—	—	—	—
BC*0062L@BBX	4VES-7	36,200	31,290	—	—	—	—	—	—	—
BC*0076L@BBX	4TES-9	44,840	38,970	—	—	—	—	—	—	—
BC*0101L@BBX	4PES-12	48,880	42,260	—	—	—	—	—	—	—
BC*0121L@BBX	4NES-14	61,430	53,200	—	—	—	—	—	—	—
BC*0131L@BBX	4JE-15	67,370	57,850	—	—	—	—	—	—	—

Notes:
N = Indoor models only available as model Rev A
* H = Outdoor, N = Indoor
@ C = 208-230/3/60, D = 460/3/60, E = 575/3/60
35°F Max Superheat

A2L UNIT SPECIFICATIONS

Medium & Low Temperature Models - Bitzer™ Compressors

Please consult AWEF table on page 89 and 90 to confirm DOE compliance per model

Model	Compressor	Refrigerant Line Connections (OD)		Rec. Capacity @90% full (lbs)		Cabinet	Dimensions (In.)			Net Wt.	Sound Data
		Liquid	Suction	Std	Opt		Depth	Width	Height	(lbs.)	dBa†
BCH0056M@ABV	4EES-6	5/8	1 3/8	67	78	C5	36.75	63.75	39.25	823	82
BCH0076M@ABV	4DES-7	5/8	1 3/8	67	78	C5	36.75	63.75	39.25	862	82
BCH0091M@ABV	4CES-9	7/8	1 5/8	87	98	C6	41.75	75.125	48.75	993	84
BCH0101M@ABV	4VES-10	7/8	1 5/8	87	98	C6	41.75	75.125	48.75	1101	84
BCH0041L@ABV	4EES-4	1/2	1 1/8	28	52	C4	36.75	51.75	39.25	595	78
BCH0056L@ABV	4DES-5	1/2	1 1/8	28	52	C4	36.75	51.75	39.25	645	78
BCH0061L@ABV	4CES-6	5/8	1 3/8	67	78	C5	36.75	63.75	39.25	775	82
BCH0062L@ABV	4VES-7	5/8	1 3/8	67	78	C5	36.75	63.75	39.25	865	82
BCH0076L@ABV	4TES-9	5/8	1 3/8	67	78	C5	36.75	63.75	39.25	935	84
BCH0101L@ABV	4PES-12	5/8	1 3/8	67	78	C5	36.75	63.75	39.25	1000	84
BCH0121L@ABV	4NES-14	7/8	1 5/8	87	98	C6	41.75	75.125	48.75	1082	84
BCH0131L@ABV	4JE-15	7/8	1 5/8	87	98	C6	41.75	75.125	48.75	1173	84

Notes:

† Estimated sound pressure values are 10 feet from the unit. For estimating sound pressure from the unit at different distances, deduct the following from the unit values: 20 feet, deduct 6 dBA; for 40 feet, deduct 12 dBA; for 80 feet, deduct 18 dBA. This data is typical of “free field” conditions for horizontal air cooled condensing units at the outlet of the discharge air. The actual sound measurements may vary depending on the condensing unit installation. Factors such as reflecting walls, background noise and mounting conditions may have a significant influence on this data.

A1 UNIT SPECIFICATIONS

Medium & Low Temperature Models - Bitzer™ Compressors

Please consult AWEF table on page 89 and 90 to confirm DOE compliance per model

Model	Compressor	Refrigerant Line Connections (OD)		Rec. Capacity @90% full (lbs)		Cabinet	Dimensions (In.)			Net Wt.	Sound Data
		Liquid	Suction	Std	Opt		Depth	Width	Height	(lbs.)	dBa†
BC*0056M@ABX	4EES-6	5/8	1 3/8	67	78	C5	36.75	63.75	39.25	823	82
BC*0076M@ABX	4DES-7	5/8	1 3/8	67	78	C5	36.75	63.75	39.25	862	82
BC*0091M@ABX	4CES-9	7/8	1 5/8	87	98	C6	41.75	75.125	48.75	993	84
BC*0101M@ABX	4VES-10	7/8	1 5/8	87	98	C6	41.75	75.125	48.75	1,101	84
BC*0041L@BBX	4EES-4	1/2	1 1/8	28	52	C4	36.75	51.75	39.25	595	78
BC*0056L@BBX	4DES-5	1/2	1 1/8	28	52	C4	36.75	51.75	39.25	645	78
BC*0061L@BBX	4CES-6	5/8	1 3/8	67	78	C5	36.75	63.75	39.25	775	82
BC*0062L@BBX	4VES-7	5/8	1 3/8	67	78	C5	36.75	63.75	39.25	865	82
BC*0076L@BBX	4TES-9	5/8	1 3/8	67	78	C5	36.75	63.75	39.25	935	84
BC*0101L@BBX	4PES-12	5/8	1 3/8	67	78	C5	36.75	63.75	39.25	1,000	84
BC*0121L@BBX	4NES-14	7/8	1 5/8	87	98	C6	41.75	75.125	48.75	1,082	84
BC*0131L@BBX	4JE-15	7/8	1 5/8	87	98	C6	41.75	75.125	48.75	1,173	84

Notes:

* H = Outdoor, N = Indoor models only available as model Rev A

@ C = 208-230/3/60, D = 460/3/60, E = 575/3/60

† Estimated sound pressure values are 10 feet from the unit. For estimating sound pressure from the unit at different distances, deduct the following from the unit values: 20 feet, deduct 6 dBA; for 40 feet, deduct 12 dBA; for 80 feet, deduct 18 dBA. This data is typical of “free field” conditions for horizontal air cooled condensing units at the outlet of the discharge air. The actual sound measurements may vary depending on the condensing unit installation. Factors such as reflecting walls, background noise and mounting conditions may have a significant influence on this data.

A1 ELECTRICAL DATA

Medium & Low Temperature Models - Bitzer™ Compressors

Please consult AWEF table on page 89 and 90 to confirm DOE compliance per model

Model	Compressor	Power†	Compressor		Condenser		intelliGen™/ Beacon II		Remote Loads- Low Amps				Remote Loads- High Amps			
			RLA[c]	LRA	No. Fans	FLA (ea)	MCA	MOPD	Evap. Fan Amps	Defrost Htrs. Amps	Electric Defrost MCA	Electric Defrost MOPD	Evap. Fan Amps	Defrost Htrs. Amps	Electric Defrost MCA	Electric Defrost MOPD
BC*0076MDABX	4DES-7Y-4SU	460/3/60	15.3	88.0	2	1.9	22.9	35.0	—	—	—	—	—	—	—	—
BC*0076MEABX	4DES-7Y-5SU	575/3/60	11.0	63.5	2	1.2	20.0	25.0	—	—	—	—	—	—	—	—
BC*0091MCABX	4CES-9Y-2DU	208-230/3/60	37.8	215.0	2	4.4	56.0	90.0	—	—	—	—	—	—	—	—
BC*0091MDABX	4CES-9Y-4SU	460/3/60	17.1	88.0	2	2.2	25.7	40.0	—	—	—	—	—	—	—	—
BC*0091MEABX	4CES-9Y-5SU	575/3/60	13.7	63.5	2	1.8	20.7	30.0	—	—	—	—	—	—	—	—
BC*0101MCABX	4VES-10Y-2NU	208-230/3/60	42.5	222.0	2	4.4	61.9	100.0	—	—	—	—	—	—	—	—
BC*0101MDABX	4VES-10Y-2NU	460/3/60	19.2	111.0	2	2.2	28.4	45.0	—	—	—	—	—	—	—	—
BC*0101MEABX	4VES-10Y-5PU	575/3/60	15.4	89.0	2	1.8	22.8	35.0	—	—	—	—	—	—	—	—
BC*0041LCBBX	4EES-4Y-2DU	208-230/3/60	22.2	142.0	1	2.7	30.5	50.0	—	—	—	—	—	—	—	—
BC*0041LDBBX	4EES-4Y-4SU	460/3/60	9.2	58.0	1	1.9	15.0	20.0	—	—	—	—	—	—	—	—
BC*0041LEBBX	4EES-4Y-5SU	575/3/60	7.4	41.5	1	1.2	15.0	15.0	—	—	—	—	—	—	—	—
BC*0056LCBBX	4DES-5Y-2DU	208-230/3/60	22.8	163.0	1	2.7	31.2	50.0	–	—	—	—	—	—	—	—
BC*0056LDBBX	4DES-5Y-4SU	460/3/60	10.8	66.5	1	1.9	20.0	25.0	—	—	—	—	—	—	—	—
BC*0056LEBBX	4DES-5Y-5SU	575/3/60	9.0	48.0	1	1.2	15.0	20.0	—	—	—	—	—	—	—	—
BC*0061LCBBX	4CES-6Y-2DU	208-230/3/60	27.6	215.0	2	2.7	39.9	60.0	—	—	—	—	—	—	—	—
BC*0061LDBBX	4CES-6Y-4SU	460/3/60	14.2	88.0	2	1.9	21.5	35.0	—	—	—	—	—	—	—	—
BC*0061LEBBX	4CES-6Y-5SU	575/3/60	11.2	63.5	2	1.2	20.0	25.0	—	—	—	—	—	—	—	—
BC*0062LCBBX	4VES-7Y-2NU	208-230/3/60	26.9	150.0	2	2.7	39.1	60.0	—	—	—	—	—	—	—	—
BC*0062LDBBX	4VES-7Y-2NU	460/3/60	12.2	75.0	2	1.9	20.0	30.0	—	—	—	—	—	—	—	—
BC*0062LEBBX	4VES-7Y-5PU	575/3/60	9.6	60.0	2	1.2	15.0	20.0	—	—	—	—	—	—	—	—
BC*0076LCBBX	4TES-9Y-2NU	208-230/3/60	31.2	180.0	2	2.7	44.4	70.0	—	—	—	—	—	—	—	—
BC*0076LDBBX	4TES-9Y-2NU	460/3/60	14.1	90.0	2	1.9	21.4	35.0	—	—	—	—	—	—	—	—
BC*0076LEBBX	4TES-9Y-5PU	575/3/60	12.2	72.0	2	1.2	20.0	25.0	—	—	—	—	—	—	—	—
BC*0101LCBBX	4PES-12Y-2NU	208-230/3/60	38.3	222.0	2	2.7	53.2	90.0	—	—	—	—	—	—	—	—
BC*0101LDBBX	4PES-12Y-2NU	460/3/60	17.3	111.0	2	1.9	25.4	40.0	—	—	—	—	—	—	—	—
BC*0101LEBBX	4PES-12Y-5PU	575/3/60	14.4	89.0	2	1.2	20.3	30.0	—	—	—	—	—	—	—	—
BC*0121LCBBX	4NES-14Y-2NU	208-230/3/60	44.0	252.0	2	4.4	63.8	100.0	—	—	—	—	—	—	—	—
BC*0121LDBBX	4NES-14Y-2NU	460/3/60	19.9	126.0	2	2.2	29.2	45.0	—	—	—	—	—	—	—	—
BC*0121LEBBX	4NES-14Y-5PU	575/3/60	15.9	101.0	2	1.8	23.5	35.0	—	—	—	—	—	—	—	—
BC*0131LCBBX	4JE-15Y-2NU	208-230/3/60	55.3	352.0	2	4.4	78.0	125.0	—	—	—	—	—	—	—	—
BC*0131LDBBX	4JE-15Y-2NU	460/3/60	25.0	176.0	2	2.2	35.7	60.0	—	—	—	—	—	—	—	—
BC*0131LEBBX	4JE-15Y-5PU	575/3/60	20.0	140.0	2	1.8	28.6	45.0	—	—	—	—	—	—	—	—

Notes:
* H = Outdoor, N = Indoor models only available as model Rev A
Per UL and NEC, RLA values have been calculated by dividing the Maximum Continuous Current (MCC) by 1.56.
† Unless otherwise noted, model is available for 50 Hz. Consult factory for details.

A2L ELECTRICAL DATA

Medium & Low Temperature Models - Bitzer™ Compressors

Please consult AWEF table on page 89 and 90 to confirm DOE compliance per model

Model	Compressor	Power[1]	Compressor		Condenser		intelliGen™/ Beacon II		Remote Loads- Low Amps				Remote Loads- High Amps			
			RLA[c]	LRA	No. Fans	FLA (ea)	MCA	MOPD	Evap. Fan Amps	Defrost Htrs. Amps	Electric Defrost MCA	Electric Defrost MOPD	Evap. Fan Amps	Defrost Htrs. Amps	Electric Defrost MCA	Electric Defrost MOPD
BCH0050MCACE	2YC3R51KE-TFC	208-230/3/60	20.0	120.0	1	2.2	27.2	45.0	—	—	—	—	15	40 (1)	50.0	60
BCH0050MDACE	2YC3R51KE-TFD	460/3/60	9.4	60.0	1	1.2	15.0	20.0	—	—	—	—	8	20 (1)	25.0	30
BCH0050MEACE	2YC3R51KE-TFE	575/3/60	6.9	49.0	1	0.8	15.0	15.0	—	—	—	—	6.4	16 (1)	20.0	20
BCH0051MCACE	2YD3R59KE-TFC	208-230/3/60	20.0	120.0	1	2.2	27.2	45.0	—	—	—	—	15	40 (1)	50.0	60
BCH0051MDACE	2YD3R59KE-TFD	460/3/60	9.4	60.0	1	1.2	15.0	20.0	—	—	—	—	8	20 (1)	25.0	30
BCH0051MEACE	2YD3R59KE-TFE	575/3/60	7.1	49.0	1	0.8	15.0	15.0	—	—	—	—	6.4	16 (1)	20.0	20
BCH0075MCACE	2YL3R73KE-TFC	208-230/3/60	28.3	169.0	1	2.2	37.6	60.0	—	—	—	—	20	48 (1)	60.0	80
BCH0075MDACE	2YL3R73KE-TFD	460/3/60	12.4	85.0	1	1.2	20.0	25.0	—	—	—	—	10	25 (1)	31.3	35
BCH0075MEACE	2YL3R73KE-TFE	575/3/60	11.9	67.0	1	0.8	20.0	25.0	—	—	—	—	8	20 (1)	25.0	35
BCH0076MCACE	2YA3R82K0-TFC	208-230/3/60	28.7	169.0	2	2.2	40.3	60.0	—	—	—	—	20	48 (1)	60.3	80
BCH0076MDACE	2YA3R82K1-TFD	460/3/60	12.6	85.0	2	1.2	20.0	30.0	—	—	—	—	10	25 (1)	31.3	40
BCH0076MEACE	2YA3R82K2-TFE	575/3/60	11.9	67.0	2	0.8	20.0	25.0	–	—	—	—	8	20 (1)	25.0	35
BCH0080MCACE	3YA3R99KE-TFC	208-230/3/60	36.8	215.0	2	2.2	50.4	80.0	—	—	—	—	20	70 (2)	87.5	100
BCH0080MDACE	3YA3R99KE-TFD	460/3/60	17.9	106.0	2	1.2	24.8	40.0	—	—	—	—	13	35 (1)	43.8	50
BCH0080MEACE	3YA3R99KE-TFE	575/3/60	14.7	84.0	2	0.8	20.0	30.0	—	—	—	—	10.4	28 (1)	35.0	45
BCH0100MCACE	3YB3R11ME-TFC	208-230/3/60	39.1	215.0	2	2.2	53.3	90.0	—	—	—	—	20	70 (2)	87.5	110
BCH0100MDACE	3YB3R11ME-TFD	460/3/60	17.9	106.0	2	1.2	24.8	40.0	—	—	—	—	13	35 (1)	43.8	50
BCH0100MEACE	3YB3R11ME-TFE	575/3/60	14.8	84.0	2	0.8	20.1	30.0	—	—	—	—	10.4	28 (1)	35.0	45
BCH0120MCACE	3YF3R14ME-TFC	208-230/3/60	43.2	275.0	2	2.2	58.4	100.0	—	—	—	—	20	70 (2)	87.5	110
BCH0120MDACE	3YF3R14ME-TFD	460/3/60	21.2	138.0	2	1.2	28.8	45.0	—	—	—	—	13	35 (1)	43.8	60
BCH0150MCACE	3YS3R16ME-TFC	208-230/3/60	53.5	275.0	2	4.4	75.7	125.0	15	70 (2)	90.7	125	20	80 (1)	100.0	125
BCH0150MDACE	3YS3R16ME-TFD	460/3/60	26.0	138.0	2	2.2	36.9	60.0	15	40 (1)	51.9	70	15	60 (2)	75.0	80
BCH0150MEACE	3YS3R16ME-TFE	575/3/60	21.2	110.0	2	1.7	29.8	50.0	12	32 (1)	41.8	60	12	48 (1)	60.0	60
BCH0056MCABV	4EES-6Y-2DU	208-230/3/60	28.1	163.0	2	2.2	39.5	60.0	—	—	—	—	20	48 (1)	60.0	80
BCH0056MDABV	4EES-6Y-4SU	460/3/60	13.4	66.5	2	1.2	20.0	30.0	—	—	—	—	10	25 (1)	31.3	40
BCH0056MEABV	4EES-6Y-5SU	575/3/60	9.4	48.0	2	0.8	15.0	20.0	—	—	—	—	8	20 (1)	25.0	30
BCH0076MCABV	4DES-7Y-2DU	208-230/3/60	31.0	215.0	2	2.2	43.1	70.0	—	—	—	—	20	48 (1)	63.1	90
BCH0076MDABV	4DES-7Y-4SU	460/3/60	15.3	88.0	2	1.2	21.5	35.0	—	—	—	—	10	25 (1)	31.5	45
BCH0076MEABV	4DES-7Y-5SU	575/3/60	11.0	63.5	2	0.8	20.0	25.0	—	—	—	—	8	20 (1)	25.0	30
BCH0091MCABV	4CES-9Y-2DU	208-230/3/60	34.2	215.0	2	4.4	51.5	80.0	15	70 (2)	87.5	100	20	80 (2)	100.0	100
BCH0091MDABV	4CES-9Y-4SU	460/3/60	17.1	88.0	2	2.2	25.7	40.0	15	25 (1)	40.7	50	15	40 (1)	50.0	50
BCH0091MEABV	4CES-9Y-5SU	575/3/60	13.7	63.5	2	1.7	20.5	30.0	12	20 (1)	32.5	45	12	32 (1)	40.0	45
BCH0101MCABV	4VES-10Y-2NU	208-230/3/60	38.5	222.0	2	4.4	56.9	90.0	15	70 (2)	87.5	110	20	80 (2)	100.0	110
BCH0101MDABV	4VES-10Y-2NU	460/3/60	19.2	111.0	2	2.2	28.4	45.0	15	25 (1)	43.4	60	15	40 (1)	50.0	60
BCH0101MEABV	4VES-10Y-5PU	575/3/60	15.4	89.0	2	1.7	22.6	35.0	12	20 (1)	34.6	50	12	32 (1)	40.0	50

AWEF DATA – MEDIUM TEMPERATURE

Bitzer™ Semi-Hermetic Compressor Models - Indoor/Outdoor

If model has a numerical value in the table below, the following statement applies:
This refrigeration system is designed and certified for use in walk-in cooler applications.

Model	Indoor					
	R-404A/ R-507A	R-448A	R-449A	R-407A	R-407C	R-407F
BC*0056MCABX	5.61	5.61	5.61	5.61	5.61	5.61
BC*0056MDABX	5.61	5.61	5.61	5.61	5.61	5.61
BC*0056MEABX	5.61	5.61	5.61	5.61	5.61	5.61
BC*0076MCABX	5.61	5.61	5.61	5.61	5.61	5.61
BC*0076MDABX	5.61	5.61	5.61	5.61	5.61	5.61
BC*0076MEABX	5.61	5.61	5.61	5.61	5.61	5.61
BC*0091MCABX	5.61	5.61	5.61	5.61	5.61	5.61
BC*0091MDABX	5.61	5.61	5.61	5.61	5.61	5.61
BC*0091MEABX	5.61	5.61	5.61	5.61	5.61	5.61
BC*0101MCABX	5.61	5.61	5.61	5.61	5.61	5.61
BC*0101MDABX	5.61	5.61	5.61	5.61	5.61	5.61
BC*0101MEABX	5.61	5.61	5.61	5.61	5.61	5.61

Model	Outdoor								
	R-404A/R-507A	R-448A	R-449A	R-407A	R-407C	R-407F	R-454A	R-454C	R-455A
BC*0056MCAB#	7.60	7.60	7.60	7.60	7.60	7.60	X	7.60	7.60
BC*0056MDAB#	7.60	7.60	7.60	7.60	7.60	7.60	X	7.60	7.60
BC*0056MEAB#	7.60	7.60	7.60	7.60	7.60	7.60	X	7.60	7.60
BC*0076MCAB#	7.60	7.60	7.60	7.60	7.60	7.60	X	7.60	7.60
BC*0076MDAB#	7.60	7.60	7.60	7.60	7.60	7.60	X	7.60	7.60
BC*0076MEAB#	7.60	7.60	7.60	7.60	7.60	7.60	X	7.60	7.60
BC*0091MCAB#	7.60	7.60	7.60	7.60	7.60	7.60	X	7.60	7.60
BC*0091MDAB#	7.60	7.60	7.60	7.60	7.60	7.60	X	7.60	7.60
BC*0091MEAB#	7.60	7.60	7.60	7.60	7.60	7.60	X	7.60	7.60
BC*0101MCAB#	7.60	7.60	7.60	7.60	7.60	7.60	X	7.60	7.60
BC*0101MDAB#	7.60	7.60	7.60	7.60	7.60	7.60	X	7.60	7.60
BC*0101MEAB#	7.60	7.60	7.60	7.60	7.60	7.60	X	7.60	7.60

Notes:
* H = Outdoor, N = Indoor models only available as model Rev A
X = model not suitable for this refrigerant
— = model is not DOE AWEF compliant
If model has a numerical value in the table, the following statement applies. "This refrigeration system is designed and certified for use in walk-in freezer applications."
= X for A1 Refrigerants, V for A2L Refrigerants

AWEF DATA – LOW TEMPERATURE

Bitzer™ Semi-Hermetic Compressor Models - Indoor/Outdoor

If model has a numerical value in the table below, the following statement applies:
This refrigeration system is designed and certified for use in walk-in freezer applications.

Model	Indoor					
	R-404A/R-507A	R-448A	R-449A	R-407A	R-407C	R-407F
BC*0041LCBBX	2.40	2.40	2.40	2.40	X	2.40
BC*0041LDBBX	2.40	2.40	2.40	2.40	X	2.40
BC*0041LEBBX	2.40	2.40	2.40	2.40	X	2.40
BC*0056LCBBX	2.40	2.40	2.40	2.40	X	2.40
BC*0056LDBBX	2.40	2.40	2.40	2.40	X	2.40
BC*0056LEBBX	2.40	2.40	2.40	2.40	X	2.40
BC*0061LCBBX	2.40	2.40	2.40	2.40	X	2.40
BC*0061LDBBX	2.40	2.40	2.40	2.40	X	2.40
BC*0061LEBBX	2.40	—	2.40	2.40	X	2.40
BC*0062LCBBX	2.40	2.40	2.40	2.40	X	2.40
BC*0062LDBBX	2.40	2.40	2.40	2.40	X	2.40
BC*0062LEBBX	2.40	2.40	2.40	2.40	X	2.40
BC*0076LCBBX	2.40	2.40	2.40	2.40	X	2.40
BC*0076LDBBX	2.40	2.40	2.40	2.40	X	2.40
BC*0076LEBBX	2.40	2.40	2.40	2.40	X	2.40
BC*0101LCBBX	2.40	2.40	2.40	2.40	X	2.40
BC*0101LDBBX	2.40	2.40	2.40	2.40	X	2.40
BC*0101LEBBX	2.40	2.40	2.40	2.40	X	2.40
BC*0121LCBBX	2.40	2.40	2.40	2.40	X	2.40
BC*0121LDBBX	2.40	2.40	2.40	2.40	X	2.40
BC*0121LEBBX	2.40	2.40	2.40	2.40	X	2.40
BC*0131LCBBX	2.40	2.40	2.40	—	X	2.40
BC*0131LDBBX	2.40	2.40	2.40	—	X	2.40
BC*0131LEBBX	2.40	2.40	2.40	—	X	2.40

Notes:
* H = Outdoor, N = Indoor models only available as model Rev A
X = model not suitable for this refrigerant
— = model is not DOE AWEF compliant
If model has a numerical value in the table, the following statement applies. "This refrigeration system is designed and certified for use in walk-in freezer applications."
= X for A1 Refrigerants, V for A2L Refrigerants

AWEF DATA – LOW TEMPERATURE

Bitzer™ Semi-Hermetic Compressor Models - Indoor/Outdoor

If model has a numerical value in the table below, the following statement applies:
This refrigeration system is designed and certified for use in walk-in freezer applications.

Model	Outdoor								
	R-404A/R-507A	R-448A	R-449A	R-407A	R-407C	R-407F	R-454A	R-454C	R-455A
BC*0041LCBB#	3.15	3.15	3.15	3.15	X	3.15	X	3.15	3.15
BC*0041LDBB#	3.15	3.15	3.15	3.15	X	3.15	X	3.15	3.15
BC*0041LEBB#	3.15	3.15	3.15	3.15	X	3.15	X	3.15	3.15
BC*0056LCBB#	3.15	3.15	3.15	3.15	X	3.15	X	3.15	3.15
BC*0056LDBB#	3.15	3.15	3.15	3.15	X	3.15	X	3.15	3.15
BC*0056LEBB#	3.15	3.15	3.15	3.15	X	3.15	X	3.15	3.15
BC*0061LCBB#	3.15	3.15	3.15	3.15	X	3.15	X	3.15	3.15
BC*0061LDBB#	3.15	3.15	3.15	3.15	X	3.15	X	3.15	3.15
BC*0061LEBB#	3.15	3.15	3.15	3.15	X	3.15	X	3.15	3.15
BC*0062LCBB#	3.15	3.15	3.15	3.15	X	3.15	X	3.15	3.15
BC*0062LDBB#	3.15	3.15	3.15	3.15	X	3.15	X	3.15	3.15
BC*0062LEBB#	3.15	3.15	3.15	3.15	X	3.15	X	3.15	3.15
BC*0076LCBB#	3.15	3.15	3.15	3.15	X	3.15	X	3.15	3.15
BC*0076LDBB#	3.15	3.15	3.15	3.15	X	3.15	X	3.15	3.15
BC*0076LEBB#	3.15	3.15	3.15	3.15	X	3.15	X	3.15	3.15
BC*0101LCBB#	3.15	3.15	3.15	3.15	X	3.15	X	3.15	3.15
BC*0101LDBB#	3.15	3.15	3.15	3.15	X	3.15	X	3.15	3.15
BC*0101LEBB#	3.15	3.15	3.15	3.15	X	3.15	X	3.15	3.15
BC*0121LCBB#	3.15	3.15	3.15	3.15	X	3.15	X	3.15	3.15
BC*0121LDBB#	3.15	3.15	3.15	3.15	X	3.15	X	3.15	3.15
BC*0121LEBB#	3.15	3.15	3.15	3.15	X	3.15	X	-	-
BC*0131LCBB#	3.15	3.15	3.15	3.15	X	3.15	X	3.15	3.15
BC*0131LDBB#	3.15	3.15	3.15	3.15	X	3.15	X	3.15	3.15
BC*0131LEBB#	3.15	3.15	3.15	3.15	X	3.15	X	-	-

Notes:
* H = Outdoor, N = Indoor models only available as model Rev A
X = model not suitable for this refrigerant
— = model is not DOE AWEF compliant
If model has a numerical value in the table, the following statement applies. "This refrigeration system is designed and certified for use in walk-in freezer applications."
= X for A1 Refrigerants, V for A2L Refrigerants

InterLINK™
Commercial Refrigeration Parts

www.interlinkparts.com
800.686.7278

Right source. Right parts. Right now.

InterLink™ is your link to a complete line of dependable and certified commercial refrigeration parts, accessories and innovative electronic controls for all Bohn equipment. At InterLink, we provide our wholesalers with a comprehensive selection of product solutions and innovative technologies for the installed customer base. And every product is built to ensure the same high performance standards with which all Heatcraft Refrigeration Products brands are built — backed by a dedicated team to serve every customer need, delivering at the best lead times in the industry.

Dependable. Versatile. Courteous.

Finally, one simple source for all your replacement needs from a name you can trust.

REPLACEMENT PARTS

Replacement Parts			
Item	Cabinet		
	C4	C5	C6
PSC Motor, 230/1	25309004	25309004	R033177500
PSC Motor, 460/1	25314601	25314601	R033177700
PSC Motor, 575/1	25309003	25309003	25302301
EC Motor, 230/1	25323201	25323201	25322601
EC Motor, 460/1	25323201*	25323201*	N/A
EC Motor, 460/3	N/A	N/A	25322701
Fan Blade	7173156	7173156	R029218600
Orbus Controller	28962001	28962001	28962001
Orbus Transducer, 0-500 psis	28911204	28911204	28911204
Smart Defrost Kit (SDK)	28999301	28999301	28999301
SDK Temperature Sensor	28902301	28902301	28902301
SDK Transducer, 0-300 psia	28911202	28911202	28911202
Fan Speed Resistor, 51 KOHM 230V	N/A	N/A	22542902
Fan Speed Resistor, 111 KOHM 460V	N/A	N/A	22542901
Fan Speed Resistor, 180 KOHM 230V	N/A	N/A	22542904
Fan Speed Resistor, 300 KOHM 460V	N/A	N/A	22542903

Notes:
* = 460/230V transformer is used in unit

DIMENSIONAL DRAWINGS

C4 CABINET

LEFT

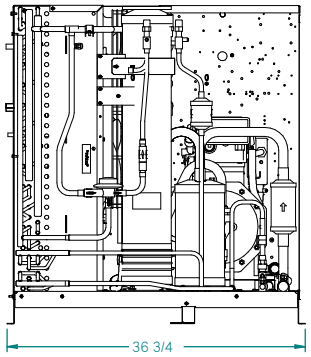

FRONT

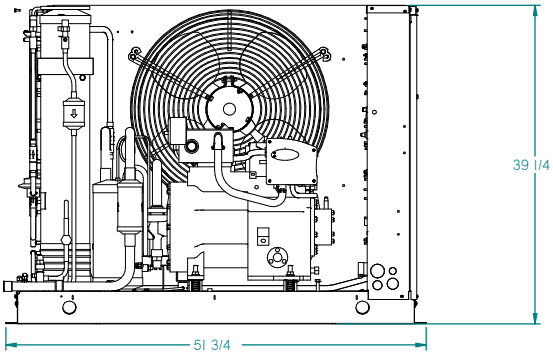

C5 CABINET

LEFT

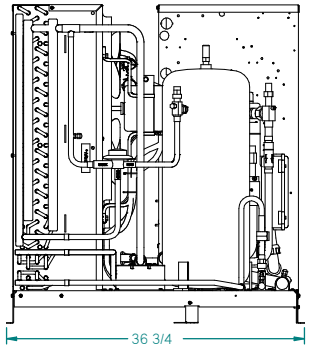

FRONT

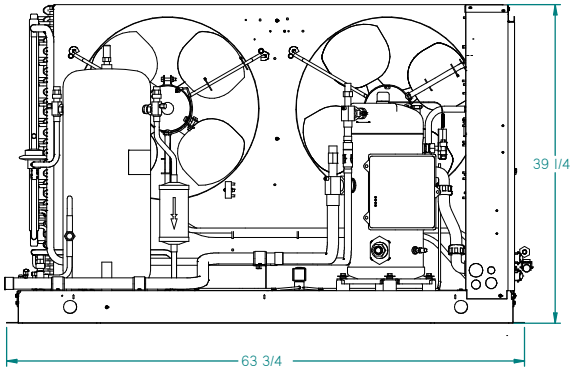

C6 CABINET

LEFT

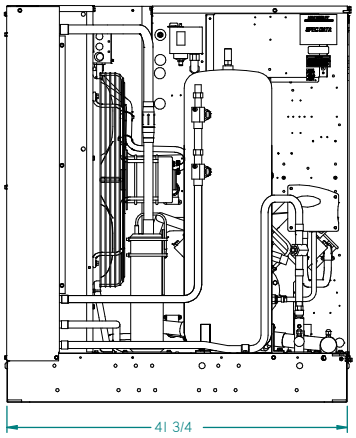

FRONT

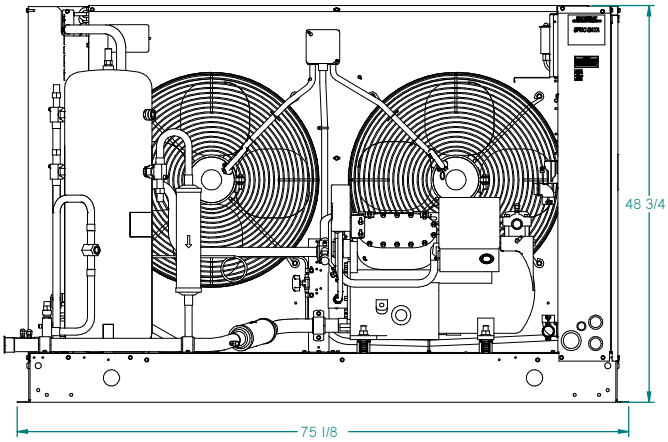

2175 West Park Place Blvd.
Stone Mountain, GA 30087
Phone: 800.537.7775 · Fax: 770.465.5900
heatcraftrpd.com

Since product improvement is a continuing effort, we reserve the right to make changes in specifications without notice.

BN-HCU-0325 | Version 007

©2025 Heatcraft Refrigeration Products LLC