BOHN

BN-VCU | **FEBRUARY 2025**
Replaces November 2024

12-50 HP VERTICAL AIR-COOLED CONDENSING UNIT

Technical Guide

Now including A2L DOE compliant models

TABLE OF CONTENTS

3 Features & Benefits
5 Nomenclature
5 Preferred Option Packages
6 Standard Features / Electrical & Mechanical Options
7 Single & Dual Compressors
8 Adjustable Head Pressure Control

Models with Copeland Discus™ Compressors

10 A2L Performance Data for Discus™ Compressors
- A2L Medium Temperature Discus™ Compressors
  - 10-12 Medium Temperature Discus™ Compressor Models (R-454A, R-454C, R-455A)
  - 13-15 Medium Temperature High Efficiency Discus™ Compressor Models (R-454A, R-454C, R-455A)
- A2L Low Temperature Discus™ Compressors
  - 16-18 Low Temperature Discus™ Compressor Models (R-454A, R-454C, R-455A)

19 A1 Performance Data for Discus™ Compressors
- A1 Medium Temperature Discus™ Compressors
  - 19-22 Medium Temperature Discus™ Compressor Models (R-404A/R-507A, R-448A/R-449A, R-407A/R-407F, R-407C)
  - 23-26 Medium Temperature High Efficiency Discus™ Compressor (R-404A/R-507A, R-448A/R-449A, R-407A/R-407F, R-407C)
- A1 Low Temperature Discus™ Compressors
  - 27-30 Low Temperature Discus™ Compressor Models (R-404A/R-507A, R-448A/R-449A, R-407A/R-407F, R-407C)

31 A2L & A1 Unit Specifications for Discus™ Compressors
- 31-33 Medium, Low and High Efficiency Temperature Models
- A2L Electrical Data for Discus™ Compressors
  - 34-51 Medium, Low and High Efficiency Temperature Models
- A1 Electrical Data for Discus™ Compressors
  - 52-69 Medium, Low and High Efficiency Temperature Models

70 A2L & A1 AWEF Data for Discus™ Compressors
- 70-71 Medium and Low Temperatures

Models with Bitzer Semi-Hermetic Compressors

73 A2L Performance Data for Bitzer Semi-Hermetic Compressors
- A2L Medium Temperature Bitzer Semi-Hermetic Compressors
  - 73-76 Medium Temperature Bitzer Semi-Hermetic Compressor Models (R-454C, R-455A)
- A2L Low Temperature Bitzer Semi-Hermetic Compressors
  - 77-78 Low Temperature Bitzer Semi-Hermetic Compressor Models (R-454C, R-455A)
- A1 Medium Temperature Bitzer Compressors
  - 79-86 Medium Temperature Bitzer Compressor Models (R-404A/R-507A, R-448A/R-449A, R-407A/R-407F, R-407C)
- A1 Low Temperature Bitzer Compressors
  - 87-90 Low Temperature Bitzer Compressor Models (R-404A/R-507A, R-448A/R-449A, R-407A/R-407F, R-407C)

91 A2L & A1 Unit Specifications for Bitzer Semi-Hermetic Compressors
- 91-92 Medium and Low Temperature Bitzer Models
- A2L Electrical Data for Semi-Hermetic Compressors
  - 93-96 Medium Temperature Semi-Hermetic Models
  - 97-100 Low Temperature Bitzer Semi-Hermetic Models
- A1 Electrical Data for Bitzer Compressors
  - 101-102 Medium Temperature Bitzer Models
  - 103-108 Low Temperature Bitzer Models

109 AWEF Data for Bitzer Semi-Hermetic Compressors
- 109 Medium and Low Temperatures

110 Dimensional Drawings

FEATURES & BENEFITS

QUALITY

- All joints are sweat type connections, no mechanical joints to leak
- Fixed high and adjustable low pressure switch
- Piping is laid out to minimize stress and vibration and is pre-bent to eliminate braze joints where possible to reduce leak potential
- Pressure relief valve on receiver
- Refrigeration duty, rifled copper condenser tubing
- Separate subcooling circuit in condenser for added capacity and vapor free liquid
- Servicemate diagnostic module standard on all non-Beacon condensing units
- Sight glass is easily viewable

SERVICEABILITY

- Convenient access panels to easily service internal components
- Large electrical panel to facilitate ease of access
- Manual pumpdown switch on all units
- Lighted e-box with battery back-up
- Hinged venturi fan panels for easy access
- E-box door props

COMPONENTS

- Receivers are sized for sufficient pumpdown capacity with inlet and outlet service valves
- Sight glass and permanent liquid line filter
- Spring-mounted compressors with suction and discharge eliminators
- High efficiency motors
- High pressure switch-auto reset
- Adjustable head pressure control
- Aluminum fin coil
- Sealed liquid line filter drier (lqd. Std.)
- Liquid line sight glass (lqd. Std.)

CABINET AND CONSTRUCTION

- All units feature the floating tube coil which eliminates tube sheet leaks
- Painted steel cabinet for superior strength and corrosion resistance
- Clevis hook-up brackets to aid unit installation

A2L FEATURES AND OPTIONS

- Condenser grills to protect coil, piping and components
- Long end panel for enhanced protection
- Additional support legs for enhanced security and robustness
- Extended suction and liquid lines for ease of installation and service
- Red tags on service valves and connection points as indicators for A2L refrigerants
- A2L labels to meet regulatory requirement

OUTSTANDING FEATURES

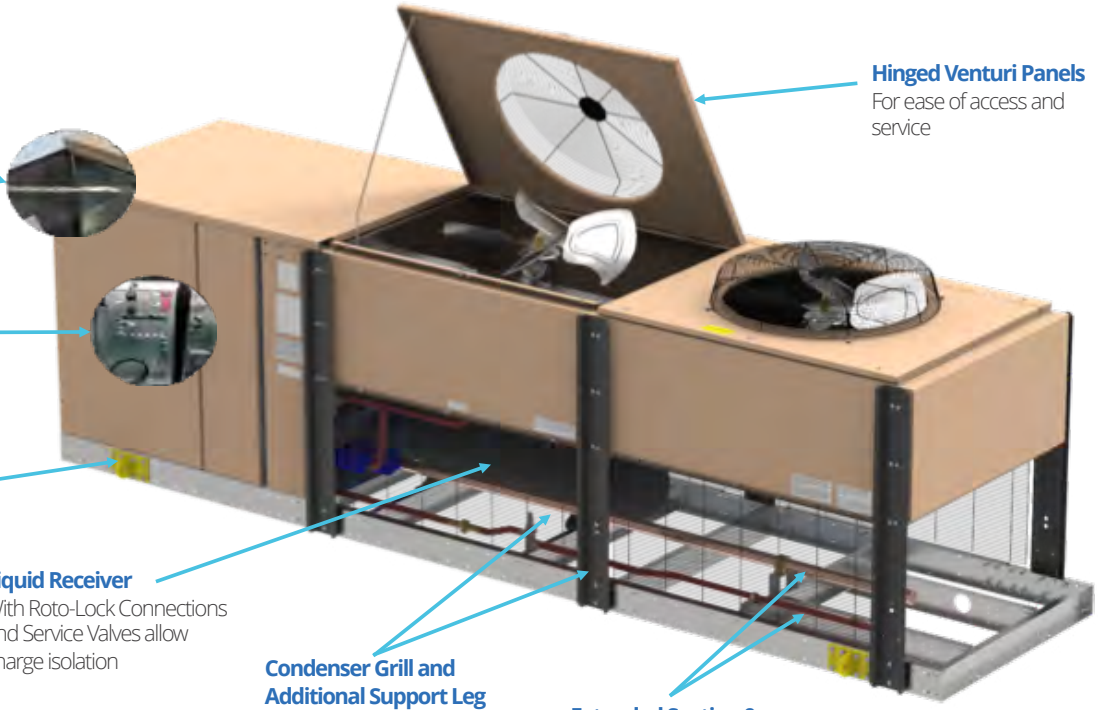

NOMENCLATURE

BRAND
B = Bohn

CONDENSING UNIT STYLE
V = Outdoor Vertical
M = Mohave
D = Outdoor Dual Vertical

TEMP RANGE
L = Low Temperature
M = Medium Temperature

REVISION

COMPRESSOR STYLE
E = A2L/A1 Discus™
V = A2L/A1 Semi-Hermetic
D = A1 Discus™
X = A1 Semi-Hermetic

B C V 0300 M C A C E A0000

PRODUCT IDENTIFIER
C = Condensing Unit

HP
0062 = 6 hp
0077 = 7.5 hp
0078 = 7.5 hp
0082 = 8 hp
0092 = 9 hp
0102 = 10 hp
0120/0122 = 12 hp
0130 = 13 hp
0150/0151/0152 = 15 hp
0200/0201/0202 = 20 hp
0220/0222 = 22 hp
0240 = 24 hp
0250/0251/0252 = 25 hp
0260 = 26 hp
0270/0272 = 27 hp
0300/0301/0302 = 30 hp
0330 = 33 hp
0350/0351/0352 = 35 hp
0400/0401/0402 = 40 hp
0440 = 44 hp
0500 = 50 hp
0520 = 52 hp
0540 = 54 hp
0600 = 60 hp
0660 = 66 hp
0700 = 70 hp
0800 = 80 hp
1100 = 100 hp

VOLTAGE
C = 208-230/3/60
D = 460/3/60
K = 230/3/60
E = 575/3/60

COMPRESSOR MANUFACTURER
C = Copeland
B = Bitzer

FACTORY INSTALLED OPTION PACKAGES
A#### = Preferred Option Packages
C#### = A la Carte Options
X#### = Custom Option Packages

FACTORY INSTALLED: PREFERRED OPTION PACKAGES

Please see Price Book or The HUB for availability

Option Code	Description (All Preferred Options include Standard Base +)
A0100	Defrost Timer – Air
A1002	Lqd. Std. Replaceable core filter-dryer + Replaceable core Suction line filter + Accumulator
A1003	Replaceable core Suction line-filter + Accumulator
A1004	Pr. Controlled fan cycling + Replaceable core Suction line-filter + Accumulator
A1300	Oil Separator with discharge line check valve
A1400	Phase Loss Motor
A0400	Compressor monitoring connection for intelliGen control at unit cooler

STANDARD FEATURES

Aluminum Fin Coil
Adjustable Head Pressure Control (150 psi for Medium Temp. and 100 psi for Low Temp.)
Sealed Liquid Line Filter Drier (Liquid Standard)
Liquid Line Sight Glass (Liquid Standard)
High Pressure Switch-Auto reset
Low Pressure Switch

ELECTRICAL OPTIONS

Option	Outdoor
Air or Electric Defrost Timer	**Option**
Compressor monitoring connection for intelliGen	**Option**
Fan Cycling-Temperature	**Option**
Fan Cycling-Pressure	**Option**
Fused Disconnect-Air	**Option**
Non-Fused Disconnect-Air	**Option**
Compressor Circuit Breaker	**Option**
Phase Loss Monitor	**Option**
Anti-short Cycling Timer	**Option**
Manual Reset High Pressure Switch	**Option**
Variable Speed EC w/ Title 24 Motor Kit	**Option**

MECHANICAL OPTIONS

Option	Outdoor
Replacable Core Liquid Line Filter Drier and Sight Glass	**Option**
Liquid Line Filter Drier, Sight Glass, and Solenoid Valve	**Option**
Suction Line Filter	**Option**
Replacable Core Suction Line Filter	**Option**
Suction Accumulator	**Option**
Oil Seperator with Discharge Line Check Valve	**Option**
Discharge Muffler	**Option**
3-Way Heat Reclaim Valve and Check Valve	**Option**
Compressor Unloading with Pressure Control for 1 Cyl. Bank	**Option**
Demand Cooling/CIC	**Option**
Standard Receiver with Low Ambient Kit (heated/insulated receiver & low pressure bypass time delay relay)	**Option**

SINGLE & DUAL COMPRESSORS

Units featuring Floating Tube Coil Design

Expanded (Locked) Auxiliary Tubes
These tubes support the coil with fins and refrigerant carrying tubes. They do not carry refrigerant and are tightly fitted on end supports and center supports

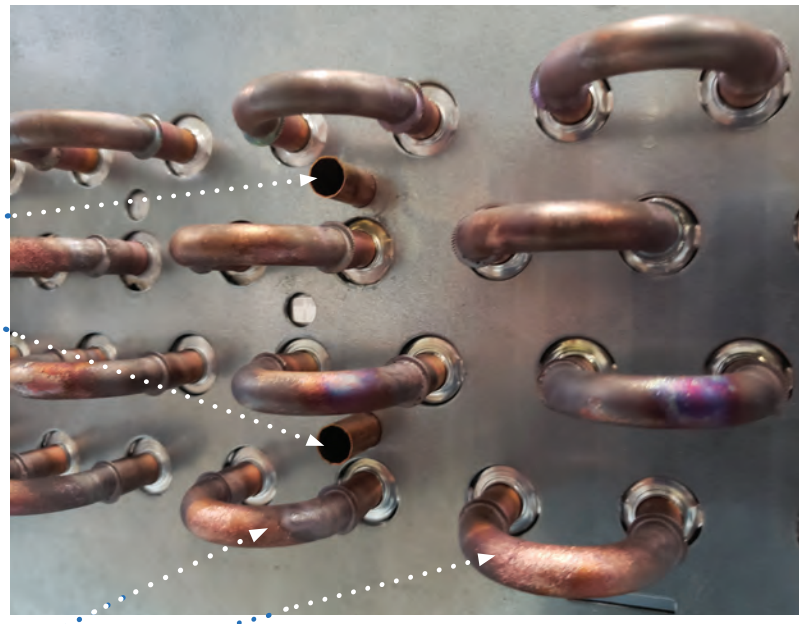

Free Floating Circuited Coil Tubes
These tubes carry refrigerant and never touch the sheet metal end supports or center supports.

All units include a limited
Five Year Warranty
against condenser leaks at tube sheets and center supports.

All condensers use the Floating Tube™ coil design to eliminate refrigerant leaks at the tube sheets. Additional tubes are added to the condenser coil. These tubes are expanded into the aluminum fins and condenser tube sheets. These anchor tubes support the weight of the coil, but are not a part of the refrigerant circuit.

The tubes in the refrigerant circuit are expanded into the fins, but “float” through oversized holes in the tube sheets. Tube sheet leaks are virtually eliminated, since the tubes which carry refrigerant never come in contact with the tube sheet.

ADJUSTABLE HEAD PRESSURE CONTROL

Resource II

Bohn's most energy efficient low ambient head pressure control. This system provides year round control of refrigerant head pressure without the use of special refrigerant expansion valves.

Resource II combines the benefits of refrigerant subcooling and reduced discharged pressure during mild ambient conditions. As the ambient temperature falls the receiver pressure is allowed to fall to a minimum of 75° F. saturated condensing pressure. The reduced discharge pressure at the compressor increases the compressor capacity and lowers the input watts from the compressor motor. Resource II also uses the reduced ambient temperature to subcool the liquid refrigerant in the condenser. This subcooled liquid also increases system capacity. As a general rule, every one degree of subcooling results in a 1/2% increase in system capacity. Together these result in greater efficiency, greater capacity, and reduced run time.

Benefits

- Automatic year round control of refrigerant head pressure without the use of special expansion valves.
- Energy savings in mild ambient conditions due to reduced compressor discharge pressure and refrigerant subcooling.
- Provides easy restart during low ambient conditions.

Operation

As the ambient temperature falls, the system condensing pressure is also reduced. This pressure is maintained by a regulator (ORI-6-65/225) at the condenser drain. At approximately 75°F. saturated condensing pressure the regulator restricts the flow of liquid refrigerant from the condenser causing the condenser to flood. This condenser flooding allows the liquid refrigerant in the condenser to become subcooled by the ambient air flowing through the condenser. As the regulator continues to flood the condenser a pressure differential will be established between the receiver and the compressor discharge. At a predescribed differential, a second valve (ORD-4) will open and allow discharge gas from the compressor to bypass the condenser and flow into the top of the receiver. This gas is used to pressurize the receiver.

Both the inlet and outlet tubes of the receiver have dip tubes which are immersed in liquid refrigerant. The liquid in the receiver acts as an insulator from the vapor area of the receiver. This unique design minimizes the contact of the hot gas used to pressurize the receiver through the ORD-4 valve. This allows bypass vapor to pressurize the receiver while reheat of the subcooled liquid is minimized.

Subcooled liquid is further enhanced by the routing of liquid from the receiver liquid line outlet to the condenser before leaving the condensing unit.

Resource II Piping Schematic

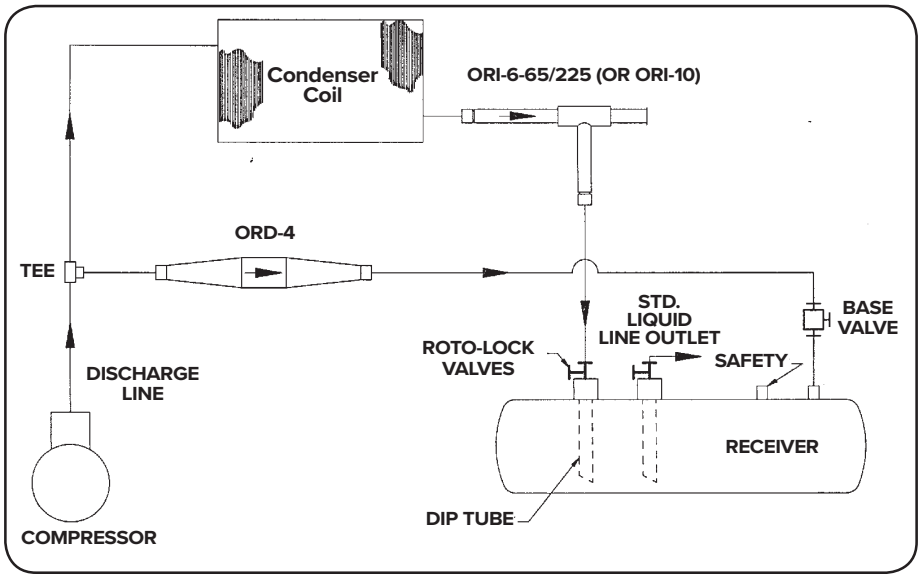

MODELS WITH COPELAND DISCUS™ COMPRESSORS

A2L PERFORMANCE DATA – R-454A

Medium Temperature Models - Copeland Discus™ Compressors

Please consult AWEF table on page 70 to confirm DOE compliance per model

R-454A		Capacity BTUH @ 90°F Ambient by SST								
Model	Compressor	40°F	35°F	30°F	25°F	20°F	15°F	10°F	0°F	-10°F
BCV0150M^ACE	3YS3R16ME	201,540	183,940	167,020	151,400	136,630	122,900	110,060	87,030	66,730
BCV0200M^ACE	4YBNR19ME	239,320	219,570	200,490	182,290	165,080	148,910	133,700	106,130	81,870
BCV0250M^ACE	4YHNR22ME	263,840	243,310	223,240	203,560	185,380	168,070	151,550	121,180	93,990
BCV0260M^ACE	4YHNR22ME	271,510	249,180	228,210	208,050	188,850	170,700	153,510	122,220	94,540
BCV0300M^ACE	4YJNR27ME	318,090	293,760	269,450	247,060	225,470	204,770	184,810	148,380	115,130
BCV0350M^ACE	6YHNR32ME	398,540	366,320	334,830	304,780	276,440	249,760	224,620	178,790	137,980
BCV0400M*ACE	6YJNR39ME	473,290	435,910	400,870	366,070	333,350	302,290	272,800	218,440	168,950
BCV0500M^ACE	6YUNR48ME	585,640	538,050	490,670	446,030	403,740	364,070	326,640	258,910	198,750

R-454A		Capacity BTUH @ 95°F Ambient by SST								
Model	Compressor	40°F	35°F	30°F	25°F	20°F	15°F	10°F	0°F	-10°F
BCV0150M^ACE	**3YS3R16ME**	**193,540**	**176,510**	**160,670**	**145,580**	**131,410**	**118,240**	**105,930**	**83,830**	**64,360**
BCV0200M^ACE	**4YBNR19ME**	**229,270**	**210,520**	**192,130**	**175,020**	**158,550**	**143,090**	**128,540**	**102,140**	**78,900**
BCV0250M^ACE	**4YHNR22ME**	**252,540**	**232,870**	**213,670**	**195,420**	**177,740**	**161,280**	**145,560**	**116,600**	**90,630**
BCV0260M^ACE	**4YHNR22ME**	**259,870**	**239,000**	**218,660**	**199,490**	**181,190**	**163,900**	**147,510**	**117,620**	**91,180**
BCV0300M^ACE	**4YJNR27ME**	**303,500**	**280,820**	**258,220**	**236,520**	**216,020**	**196,420**	**177,630**	**142,760**	***111,020***
BCV0350M^ACE	**6YHNR32ME**	**381,620**	**351,080**	**320,780**	**292,110**	**265,270**	**239,880**	**216,040**	**172,110**	**133,140**
BCV0400M*ACE	**6YJNR39ME**	**452,170**	**416,940**	**383,840**	**350,950**	**319,880**	**290,280**	**262,250**	**210,420**	***163,060***
BCV0500M^ACE	**6YUNR48ME**	**561,230**	**516,120**	**470,510**	**428,190**	**387,540**	**349,770**	**314,040**	**249,110**	***191,440***

R-454A		Capacity BTUH @ 100°F Ambient by SST								
New Model	Compressor	40°F	35°F	30°F	25°F	20°F	15°F	10°F	0°F	-10°F
BCV0150M^ACE	3YS3R16ME	185,410	169,360	154,050	139,620	126,080	113,480	101,700	80,590	61,970
BCV0200M^ACE	4YBNR19ME	219,110	201,350	184,100	167,580	151,910	137,180	123,300	98,150	75,940
BCV0250M^ACE	4YHNR22ME	---	222,280	204,210	186,870	170,090	154,480	139,550	111,990	*87,280*
BCV0260M^ACE	4YHNR22ME	248,100	227,930	209,120	190,950	173,550	157,100	141,520	113,030	*87,830*
BCV0300M^ACE	4YJNR27ME	---	---	246,440	225,880	206,550	188,010	170,250	137,160	*106,980*
BCV0350M^ACE	6YHNR32ME	363,940	335,300	307,170	279,600	254,010	229,850	207,210	165,420	*128,370*
BCV0400M*ACE	6YJNR39ME	---	397,370	366,390	336,020	306,230	278,270	251,630	202,380	*157,390*
BCV0500M^ACE	6YUNR48ME	---	493,490	450,650	410,160	371,610	335,470	301,280	239,290	*184,320*

R-454A		Capacity BTUH @ 110°F Ambient by SST								
Model	Compressor	40°F	35°F	30°F	25°F	20°F	15°F	10°F	0°F	-10°F
BCV0150M^ACE	3YS3R16ME	168,830	154,360	140,520	127,440	115,170	103,830	93,170	74,000	*57,200*
BCV0200M^ACE	4YBNR19ME	---	---	167,360	152,560	138,460	125,180	112,700	90,030	*70,000*
BCV0250M^ACE	4YHNR22ME	---	---	---	---	---	140,530	127,230	102,700	*80,630*
BCV0260M^ACE	4YHNR22ME	---	---	---	173,470	157,930	143,200	129,230	103,710	*81,140*
BCV0300M^ACE	4YJNR27ME	---	---	---	---	---	170,990	154,980	*125,820*	*98,980*
BCV0350M^ACE	6YHNR32ME	---	---	---	254,410	231,150	209,530	189,330	*152,080*	*118,980*
BCV0400M*ACE	6YJNR39ME	---	---	---	---	---	253,830	230,100	*186,350*	*146,220*
BCV0500M^ACE	6YUNR48ME	---	---	---	---	---	306,440	275,700	*219,820*	*170,330*

Notes:

LOW SUCTION TEMPERATURE APPLICATIONS IN THESE RANGES REQUIRE THE ADDITION OF A HEAD FAN

^ C = 208-230/3/60, D = 460/3/60, E = 575/3/60

* K = 230/3/60, D = 460/3/60, E = 575/3/60

For 50 cycle capacity, multiply values by .86

A2L PERFORMANCE DATA – R-454C

Medium Temperature Models - Copeland Discus™ Compressors

Please consult AWEF table on page 70 to confirm DOE compliance per model

R-454C		Capacity BTUH @ 90°F Ambient by SST								
Model	Compressor	40°F	35°F	30°F	25°F	20°F	15°F	10°F	0°F	-10°F
BCV0150M^ACE	3YS3R16ME	171,540	156,200	141,630	128,020	115,260	103,520	92,480	72,840	55,860
BCV0200M^ACE	4YBNR19ME	205,710	187,870	171,010	155,020	140,030	126,060	112,900	89,330	68,640
BCV0250M^ACE	4YHNR22ME	229,060	210,280	192,150	174,870	158,700	143,260	128,770	102,400	79,160
BCV0260M^ACE	4YHNR22ME	234,380	214,510	195,730	177,650	160,690	144,810	129,940	103,120	79,510
BCV0300M^ACE	4YJNR27ME	277,590	255,250	233,740	213,460	193,780	175,240	157,820	125,930	97,520
BCV0350M^ACE	6YHNR32ME	345,620	315,820	287,290	260,300	235,140	211,600	189,450	150,030	115,880
BCV0400M*ACE	6YJNR39ME	412,690	379,430	346,530	315,620	286,470	259,050	233,080	185,790	143,360
BCV0500M^ACE	6YUNR48ME	513,110	468,000	424,690	384,160	346,120	311,060	278,040	219,310	167,480

R-454C		Capacity BTUH @ 95°F Ambient by SST								
Model	Compressor	40°F	35°F	30°F	25°F	20°F	15°F	10°F	0°F	-10°F
BCV0150M^ACE	**3YS3R16ME**	**164,880**	**150,140**	**136,150**	**123,070**	**110,870**	**99,500**	**88,930**	**70,100**	**53,850**
BCV0200M^ACE	**4YBNR19ME**	**197,510**	**180,410**	**164,230**	**148,900**	**134,520**	**121,120**	**108,550**	**85,920**	**66,120**
BCV0250M^ACE	**4YHNR22ME**	**219,640**	**201,680**	**184,340**	**167,830**	**152,260**	**137,590**	**123,710**	**98,500**	**76,280**
BCV0260M^ACE	**4YHNR22ME**	**224,830**	**205,850**	**187,860**	**170,600**	**154,340**	**139,120**	**124,890**	**99,230**	**76,600**
BCV0300M^ACE	**4YJNR27ME**	**265,610**	**244,410**	**223,940**	**204,150**	**185,850**	**168,180**	**151,520**	**121,090**	**93,970**
BCV0350M^ACE	**6YHNR32ME**	**331,360**	**302,760**	**275,550**	**249,660**	**225,580**	**202,970**	**181,890**	**144,350**	**111,810**
BCV0400M*ACE	**6YJNR39ME**	**394,970**	**363,270**	**332,320**	**302,800**	**274,820**	**248,690**	**223,970**	**178,770**	**138,200**
BCV0500M^ACE	**6YUNR48ME**	**492,810**	**449,450**	**408,030**	**368,980**	**332,560**	**298,780**	**267,100**	**210,830**	**161,110**

R-454C		Capacity BTUH @ 100°F Ambient by SST								
New Model	Compressor	40°F	35°F	30°F	25°F	20°F	15°F	10°F	0°F	-10°F
BCV0150M^ACE	3YS3R16ME	158,090	143,950	130,550	117,960	106,310	95,450	85,330	67,340	51,840
BCV0200M^ACE	4YBNR19ME	189,180	172,820	157,330	142,700	128,950	116,050	104,110	82,490	63,590
BCV0250M^ACE	4YHNR22ME	210,050	192,950	176,450	160,910	145,840	131,840	118,590	94,590	73,400
BCV0260M^ACE	4YHNR22ME	215,020	196,980	179,660	163,410	147,900	133,370	119,700	95,230	73,710
BCV0300M^ACE	4YJNR27ME	253,530	233,440	213,840	195,260	177,510	161,000	145,150	116,130	90,400
BCV0350M^ACE	6YHNR32ME	316,820	289,600	263,590	238,950	215,930	194,400	174,260	138,520	107,820
BCV0400M*ACE	6YJNR39ME	377,400	347,390	317,830	289,730	263,140	238,090	214,680	171,710	133,060
BCV0500M^ACE	6YUNR48ME	472,370	430,570	390,970	353,660	318,740	286,000	256,020	202,170	154,690

R-454C		Capacity BTUH @ 110°F Ambient by SST								
Model	Compressor	40°F	35°F	30°F	25°F	20°F	15°F	10°F	0°F	-10°F
BCV0150M^ACE	3YS3R16ME	144,260	131,320	119,080	107,730	97,110	87,180	78,000	61,730	47,840
BCV0200M^ACE	4YBNR19ME	---	157,500	143,350	130,120	117,520	105,980	95,170	75,560	58,500
BCV0250M^ACE	4YHNR22ME	---	---	---	146,160	132,870	120,190	108,240	86,660	67,610
BCV0260M^ACE	4YHNR22ME	---	---	163,860	148,930	134,800	121,740	109,400	87,240	67,920
BCV0300M^ACE	4YJNR27ME	---	---	---	---	161,510	146,420	132,200	106,310	83,200
BCV0350M^ACE	6YHNR32ME	---	---	239,350	217,170	196,100	176,940	158,910	127,060	100,000
BCV0400M*ACE	6YJNR39ME	---	---	---	---	239,290	216,940	195,820	157,290	122,740
BCV0500M^ACE	6YUNR48ME	---	---	---	322,380	290,590	261,130	233,580	184,680	141,860

Notes:

LOW SUCTION TEMPERATURE APPLICATIONS IN THESE RANGES REQUIRE THE ADDITION OF A HEAD FAN

^ C = 208-230/3/60, D = 460/3/60, E = 575/3/60

* K = 230/3/60, D = 460/3/60, E = 575/3/60

For 50 cycle capacity, multiply values by .86

A2L PERFORMANCE DATA – R-455A

Medium Temperature Models - Copeland Discus™ Compressors

Please consult AWEF table on page 70 to confirm DOE compliance per model

R-455A		Capacity BTUH @ 90°F Ambient by SST								
Model	Compressor	40°F	35°F	30°F	25°F	20°F	15°F	10°F	0°F	-10°F
BCV0150M^ACE	3YS3R16ME	178,350	162,260	147,020	132,820	119,460	107,170	95,710	75,180	57,350
BCV0200M^ACE	4YBNR19ME	214,100	195,480	177,660	160,840	145,170	130,540	116,830	92,200	70,560
BCV0250M^ACE	4YHNR22ME	237,960	218,150	199,340	181,290	164,240	148,210	133,100	105,710	81,390
BCV0260M^ACE	4YHNR22ME	244,020	223,190	203,250	184,370	166,620	150,020	134,570	106,410	81,760
BCV0300M^ACE	4YJNR27ME	288,860	265,490	242,900	221,290	200,790	181,510	163,240	129,940	100,250
BCV0350M^ACE	6YHNR32ME	358,390	327,560	298,030	270,030	243,760	219,230	196,330	155,000	119,080
BCV0400M*ACE	6YJNR39ME	429,430	393,240	359,570	326,960	296,130	267,090	239,960	190,560	146,920
BCV0500M^ACE	6YUNR48ME	532,660	484,760	439,830	397,330	357,410	320,240	285,860	224,440	171,470

R-455A		Capacity BTUH @ 95°F Ambient by SST								
Model	Compressor	40°F	35°F	30°F	25°F	20°F	15°F	10°F	0°F	-10°F
BCV0150M^ACE	**3YS3R16ME**	**171,360**	**155,900**	**141,270**	**127,610**	**114,830**	**103,010**	**92,000**	**72,310**	**55,230**
BCV0200M^ACE	**4YBNR19ME**	**205,480**	**187,590**	**170,500**	**154,460**	**139,380**	**125,400**	**112,200**	**88,620**	**67,920**
BCV0250M^ACE	**4YHNR22ME**	**227,910**	**209,090**	**191,070**	**173,770**	**157,500**	**142,190**	**127,810**	**101,570**	**78,400**
BCV0260M^ACE	**4YHNR22ME**	**233,840**	**214,040**	**194,940**	**176,940**	**159,950**	**144,080**	**129,250**	**102,340**	**78,760**
BCV0300M^ACE	**4YJNR27ME**	**276,270**	**254,100**	**232,590**	**211,990**	**192,510**	**174,110**	**156,710**	**124,900**	**96,620**
BCV0350M^ACE	**6YHNR32ME**	**343,410**	**313,790**	**285,620**	**258,870**	**233,760**	**210,340**	**188,430**	**149,080**	**114,880**
BCV0400M*ACE	**6YJNR39ME**	**411,100**	**377,180**	**344,410**	**313,490**	**284,000**	**256,450**	**230,460**	**183,250**	**141,670**
BCV0500M^ACE	**6YUNR48ME**	**511,470**	**466,030**	**422,570**	**381,060**	**343,160**	**307,610**	**274,470**	**215,540**	**164,900**

R-455A		Capacity BTUH @ 100°F Ambient by SST								
New Model	Compressor	40°F	35°F	30°F	25°F	20°F	15°F	10°F	0°F	-10°F
BCV0150M^ACE	3YS3R16ME	164,240	149,400	135,400	122,290	110,080	98,770	88,230	69,420	53,130
BCV0200M^ACE	4YBNR19ME	196,710	179,570	163,320	147,940	133,540	120,160	107,580	85,020	65,300
BCV0250M^ACE	4YHNR22ME	---	199,930	182,630	166,310	150,790	136,190	122,410	97,470	75,420
BCV0260M^ACE	4YHNR22ME	223,700	204,650	186,590	169,390	153,180	138,030	123,880	98,220	75,770
BCV0300M^ACE	4YJNR27ME	---	242,660	222,230	202,740	184,130	166,570	150,050	119,810	92,990
BCV0350M^ACE	6YHNR32ME	328,190	300,050	272,990	247,640	223,710	201,390	180,440	143,130	110,740
BCV0400M*ACE	6YJNR39ME	---	360,630	329,600	299,820	271,980	245,690	220,920	176,050	136,520
BCV0500M^ACE	6YUNR48ME	---	445,670	404,510	365,710	328,930	294,800	263,050	206,690	158,490

R-455A		Capacity BTUH @ 110°F Ambient by SST								
Model	Compressor	40°F	35°F	30°F	25°F	20°F	15°F	10°F	0°F	-10°F
BCV0150M^ACE	3YS3R16ME	149,810	136,240	123,460	111,550	100,430	90,200	80,640	63,590	48,910
BCV0200M^ACE	4YBNR19ME	---	---	148,700	134,750	121,710	109,500	98,140	77,800	60,030
BCV0250M^ACE	4YHNR22ME	---	---	---	---	---	123,970	111,570	89,170	*69,470*
BCV0260M^ACE	4YHNR22ME	---	---	---	154,120	139,470	125,810	112,970	89,940	69,810
BCV0300M^ACE	4YJNR27ME	---	---	---	---	---	151,560	136,670	109,700	*85,790*
BCV0350M^ACE	6YHNR32ME	---	---	---	224,960	203,410	183,260	164,630	131,320	*102,690*
BCV0400M*ACE	6YJNR39ME	---	---	---	---	---	223,950	201,700	161,620	*126,380*
BCV0500M^ACE	6YUNR48ME	---	---	---	---	300,140	268,970	240,110	189,230	*145,910*

Notes:

LOW SUCTION TEMPERATURE APPLICATIONS IN THESE RANGES REQUIRE THE ADDITION OF A HEAD FAN

^ C = 208-230/3/60, D = 460/3/60, E = 575/3/60

* K = 230/3/60, D = 460/3/60, E = 575/3/60

For 50 cycle capacity, multiply values by .86

A2L PERFORMANCE DATA – R-454A

Medium Temperature High Efficiency Models - Copeland Discus™ Compressors

Please consult AWEF table on page 70 to confirm DOE compliance per model

R-454A		Capacity BTUH @ 90°F Ambient by SST								
Model	Compressor	40°F	35°F	30°F	25°F	20°F	15°F	10°F	0°F	-10°F
BCV0151M^ACE	3YS3R16ME	196,800	179,940	163,840	148,820	134,640	121,380	108,920	86,330	66,360
BCV0201M^ACE	4YBNR19ME	248,740	226,790	205,880	186,400	168,230	151,330	135,540	107,180	82,370
BCV0251M^ACE	4YHNR22ME	279,820	256,180	233,320	212,030	191,840	172,980	155,260	123,190	95,010
BCV0301M^ACE	4YJNR27ME	359,330	326,990	296,530	268,060	241,580	217,110	194,330	153,510	117,750
BCV0351M^ACE	6YHNR32ME	422,130	384,710	349,500	316,440	285,310	256,460	229,750	181,590	139,350
BCV0401M*ACE	6YJNR39ME	530,580	482,040	436,450	394,040	354,710	318,490	284,990	224,890	172,170

R-454A		Capacity BTUH @ 95°F Ambient by SST								
Model	Compressor	40°F	35°F	30°F	25°F	20°F	15°F	10°F	0°F	-10°F
BCV0151M^ACE	**3YS3R16ME**	**188,720**	**172,750**	**157,320**	**142,950**	**129,390**	**116,690**	**104,760**	**83,120**	**63,980**
BCV0201M^ACE	**4YBNR19ME**	**239,020**	**217,800**	**197,990**	**179,330**	**161,860**	**145,640**	**130,470**	**103,220**	**79,390**
BCV0251M^ACE	**4YHNR22ME**	**268,410**	**245,860**	**224,010**	**203,690**	**184,440**	**166,380**	**149,400**	**118,660**	**91,650**
BCV0301M^ACE	**4YJNR27ME**	**345,530**	**314,570**	**285,360**	**258,020**	**232,600**	**209,080**	**187,190**	**147,980**	**113,620**
BCV0351M^ACE	**6YHNR32ME**	**405,220**	**369,650**	**335,880**	**304,290**	**274,440**	**246,770**	**221,110**	**174,950**	**134,480**
BCV0401M*ACE	**6YJNR39ME**	**510,640**	**464,040**	**420,250**	**379,460**	**341,660**	**306,970**	**274,610**	**216,900**	**166,220**

R-454A		Capacity BTUH @ 100°F Ambient by SST								
Model	Compressor	40°F	35°F	30°F	25°F	20°F	15°F	10°F	0°F	-10°F
BCV0151M^ACE	3YS3R16ME	180,690	165,460	150,860	136,950	124,010	111,910	100,450	79,870	61,610
BCV0201M^ACE	4YBNR19ME	229,250	209,120	189,960	172,100	155,360	139,820	125,310	99,220	76,420
BCV0251M^ACE	4YHNR22ME	256,700	235,360	214,810	195,180	176,830	159,630	143,420	114,080	88,320
BCV0301M^ACE	4YJNR27ME	331,530	301,900	273,950	247,790	223,430	200,910	179,960	142,440	109,560
BCV0351M^ACE	6YHNR32ME	388,230	354,300	322,000	291,860	263,330	236,870	212,310	168,260	129,670
BCV0401M*ACE	6YJNR39ME	490,230	445,630	403,880	364,640	328,420	295,020	264,210	208,890	160,340

R-454A		Capacity BTUH @ 110°F Ambient by SST								
Model	Compressor	40°F	35°F	30°F	25°F	20°F	15°F	10°F	0°F	-10°F
BCV0151M^ACE	3YS3R16ME	---	150,500	137,170	124,820	113,140	102,190	91,890	73,290	*56,820*
BCV0201M^ACE	4YBNR19ME	209,290	190,860	173,640	157,390	142,170	128,020	114,810	91,120	*70,500*
BCV0251M^ACE	4YHNR22ME	---	---	195,400	177,980	161,430	145,910	131,280	104,810	*81,650*
BCV0301M^ACE	4YJNR27ME	303,130	276,240	250,810	226,980	204,810	184,320	165,250	131,250	*101,460*
BCV0351M^ACE	6YHNR32ME	353,900	322,840	293,640	266,490	240,690	216,900	194,690	154,910	*120,210*
BCV0401M*ACE	6YJNR39ME	448,690	408,150	370,030	334,460	301,640	271,230	243,120	192,890	*148,930*

Notes:

LOW SUCTION TEMPERATURE APPLICATIONS IN THESE RANGES REQUIRE THE ADDITION OF A HEAD FAN

^ C = 208-230/3/60, D = 460/3/60, E = 575/3/60

* K = 230/3/60, D = 460/3/60, E = 575/3/60

For 50 cycle capacity, multiply values by .86

A2L PERFORMANCE DATA – R-454C

Medium Temperature High Efficiency Models - Copeland Discus™ Compressors

Please consult AWEF table on page 70 to confirm DOE compliance per model

R-454C		Capacity BTUH @ 90°F Ambient by SST								
Model	Compressor	40°F	35°F	30°F	25°F	20°F	15°F	10°F	0°F	-10°F
BCV0151M^ACE	3YS3R16ME	168,100	153,340	139,400	126,290	113,930	102,410	91,600	72,320	55,600
BCV0201M^ACE	4YBNR19ME	210,420	191,590	173,790	157,240	141,660	127,300	113,810	89,780	68,840
BCV0251M^ACE	4YHNR22ME	239,310	218,450	198,600	180,100	162,570	146,250	130,960	103,630	79,780
BCV0301M^ACE	4YJNR27ME	303,790	276,160	250,190	226,000	203,540	182,790	163,610	129,060	99,050
BCV0351M^ACE	6YHNR32ME	360,220	327,450	296,540	267,560	240,740	215,990	192,830	151,780	116,670
BCV0401M*ACE	6YJNR39ME	447,860	406,630	368,080	332,490	299,250	268,730	240,500	189,770	145,210

R-454C		Capacity BTUH @ 95°F Ambient by SST								
Model	Compressor	40°F	35°F	30°F	25°F	20°F	15°F	10°F	0°F	-10°F
BCV0151M^ACE	**3YS3R16ME**	**161,430**	**147,270**	**133,960**	**121,300**	**109,420**	**98,390**	**88,080**	**69,570**	**53,610**
BCV0201M^ACE	**4YBNR19ME**	**202,330**	**184,190**	**167,230**	**151,190**	**136,170**	**122,370**	**109,460**	**86,390**	**66,290**
BCV0251M^ACE	**4YHNR22ME**	**229,800**	**210,110**	**190,860**	**173,070**	**156,260**	**140,600**	**125,970**	**99,730**	**76,880**
BCV0301M^ACE	**4YJNR27ME**	**292,200**	**265,700**	**240,740**	**217,480**	**195,850**	**175,990**	**157,460**	**124,290**	**95,510**
BCV0351M^ACE	**6YHNR32ME**	**346,170**	**314,680**	**284,750**	**257,100**	**231,360**	**207,550**	**185,310**	**146,080**	**112,570**
BCV0401M*ACE	**6YJNR39ME**	**431,050**	**391,400**	**354,420**	**319,880**	**288,030**	**258,760**	**231,560**	**182,760**	**140,030**

R-454C		Capacity BTUH @ 100°F Ambient by SST								
Model	Compressor	40°F	35°F	30°F	25°F	20°F	15°F	10°F	0°F	-10°F
BCV0151M^ACE	3YS3R16ME	154,620	141,090	128,350	116,210	104,850	94,240	84,490	66,790	51,620
BCV0201M^ACE	4YBNR19ME	194,130	176,730	160,440	145,060	130,700	117,410	105,100	82,970	63,790
BCV0251M^ACE	4YHNR22ME	220,280	201,150	183,170	165,970	149,860	134,870	120,920	95,800	74,000
BCV0301M^ACE	4YJNR27ME	280,500	255,060	231,100	208,860	188,030	168,980	151,230	119,460	91,980
BCV0351M^ACE	6YHNR32ME	331,800	301,630	272,980	246,500	221,800	199,020	177,730	140,260	108,540
BCV0401M*ACE	6YJNR39ME	413,960	375,660	340,320	307,180	276,570	248,540	222,430	175,730	134,880

R-454C		Capacity BTUH @ 110°F Ambient by SST								
Model	Compressor	40°F	35°F	30°F	25°F	20°F	15°F	10°F	0°F	-10°F
BCV0151M^ACE	3YS3R16ME	140,740	128,560	116,920	105,910	95,580	86,010	77,090	61,210	47,610
BCV0201M^ACE	4YBNR19ME	177,430	161,690	146,630	132,520	119,460	107,350	96,140	76,050	58,730
BCV0251M^ACE	4YHNR22ME	---	183,840	167,190	151,510	136,890	123,310	110,590	87,860	68,220
BCV0301M^ACE	4YJNR27ME	256,510	233,050	211,450	190,970	172,130	154,680	138,510	109,640	84,780
BCV0351M^ACE	6YHNR32ME	302,560	275,100	248,980	224,810	202,350	181,650	162,430	128,780	100,660
BCV0401M*ACE	6YJNR39ME	378,870	343,850	311,420	281,210	253,260	227,670	203,890	161,480	124,580

Notes:

LOW SUCTION TEMPERATURE APPLICATIONS IN THESE RANGES REQUIRE THE ADDITION OF A HEAD FAN

^ C = 208-230/3/60, D = 460/3/60, E = 575/3/60

* K = 230/3/60, D = 460/3/60, E = 575/3/60

For 50 cycle capacity, multiply values by .86

A2L PERFORMANCE DATA – R-455A

Medium Temperature High Efficiency Models - Copeland Discus™ Compressors

Please consult AWEF table on page 70 to confirm DOE compliance per model

R-455A		Capacity BTUH @ 90°F Ambient by SST								
Model	Compressor	40°F	35°F	30°F	25°F	20°F	15°F	10°F	0°F	-10°F
BCV0151M^ACE	3YS3R16ME	174,750	159,260	144,670	130,910	117,990	106,050	94,810	74,680	57,100
BCV0201M^ACE	4YBNR19ME	219,240	199,340	180,660	163,110	146,760	131,690	117,660	92,580	70,690
BCV0251M^ACE	4YHNR22ME	248,610	226,760	205,970	186,470	168,160	151,230	135,290	106,820	81,890
BCV0301M^ACE	4YJNR27ME	315,930	286,920	259,530	234,090	210,520	188,840	168,690	132,710	101,480
BCV0351M^ACE	6YHNR32ME	373,900	339,640	307,340	277,250	249,080	223,320	199,330	156,570	119,700
BCV0401M*ACE	6YJNR39ME	466,010	422,470	381,540	343,800	308,880	276,740	247,010	194,150	148,400

R-455A		Capacity BTUH @ 95°F Ambient by SST								
Model	Compressor	40°F	35°F	30°F	25°F	20°F	15°F	10°F	0°F	-10°F
BCV0151M^ACE	**3YS3R16ME**	**167,650**	**152,890**	**138,860**	**125,690**	**113,320**	**101,860**	**91,080**	**71,820**	**55,000**
BCV0201M^ACE	**4YBNR19ME**	**210,710**	**191,550**	**173,630**	**156,740**	**141,040**	**126,540**	**113,110**	**89,040**	**68,080**
BCV0251M^ACE	**4YHNR22ME**	**238,670**	**217,720**	**197,810**	**179,050**	**161,560**	**145,270**	**130,010**	**102,750**	**78,910**
BCV0301M^ACE	**4YJNR27ME**	**303,740**	**275,840**	**249,580**	**225,030**	**202,460**	**181,600**	**162,250**	**127,740**	**97,850**
BCV0351M^ACE	**6YHNR32ME**	**358,990**	**326,030**	**295,110**	**266,070**	**239,320**	**214,500**	**191,560**	**150,600**	**115,470**
BCV0401M*ACE	**6YJNR39ME**	**448,190**	**406,360**	**366,930**	**330,660**	**297,040**	**266,180**	**237,610**	**186,920**	**143,120**

R-455A		Capacity BTUH @ 100°F Ambient by SST								
Model	Compressor	40°F	35°F	30°F	25°F	20°F	15°F	10°F	0°F	-10°F
BCV0151M^ACE	3YS3R16ME	160,570	146,460	133,030	120,390	108,650	97,590	87,340	68,920	52,890
BCV0201M^ACE	4YBNR19ME	202,050	183,700	166,490	150,310	135,210	121,380	108,490	85,450	65,450
BCV0251M^ACE	4YHNR22ME	228,590	208,550	189,510	171,600	154,800	139,260	124,660	98,640	75,930
BCV0301M^ACE	4YJNR27ME	291,300	264,540	239,280	215,950	194,240	174,240	155,720	122,740	94,210
BCV0351M^ACE	6YHNR32ME	343,770	312,390	282,720	254,910	229,300	205,570	183,670	144,670	111,310
BCV0401M*ACE	6YJNR39ME	430,260	389,910	352,240	317,330	285,090	255,480	228,120	179,650	137,900

R-455A		Capacity BTUH @ 110°F Ambient by SST								
Model	Compressor	40°F	35°F	30°F	25°F	20°F	15°F	10°F	0°F	-10°F
BCV0151M^ACE	3YS3R16ME	---	---	121,150	109,680	98,930	88,980	79,690	63,080	48,680
BCV0201M^ACE	4YBNR19ME	184,510	167,720	151,980	137,110	123,490	110,850	99,100	78,220	60,190
BCV0251M^ACE	4YHNR22ME	---	---	172,710	156,420	141,230	127,070	113,900	90,360	69,980
BCV0301M^ACE	4YJNR27ME	266,230	241,570	218,620	197,270	177,500	159,300	142,470	112,640	87,000
BCV0351M^ACE	6YHNR32ME	313,040	284,530	257,460	232,440	209,140	187,670	167,800	132,820	*103,200*
BCV0401M*ACE	6YJNR39ME	393,390	356,680	322,220	290,270	260,920	233,930	209,060	165,170	127,670

Notes:

LOW SUCTION TEMPERATURE APPLICATIONS IN THESE RANGES REQUIRE THE ADDITION OF A HEAD FAN

^ C = 208-230/3/60, D = 460/3/60, E = 575/3/60

* K = 230/3/60, D = 460/3/60, E = 575/3/60

For 50 cycle capacity, multiply values by .86

A2L PERFORMANCE DATA – R-454A

Low Temperature Models - Copeland Discus™ Compressors

Please consult AWEF table on page 71 to confirm DOE compliance per model

R-454A		Capacity BTUH @ 90°F Ambient by SST								
Model	Compressor	0°F	-5°F	-10°F	-15°F	-20°F	-25°F	-30°F	-35°F	-40°F
BCV0120L^ACE	4YBNF40KE	105,480	93,210	81,800	71,220	61,470	52,610	44,660	37,550	31,320
BCV0150L^ACE	4YHNF46KE	121,120	107,150	94,200	82,090	70,940	60,780	51,640	43,470	36,290
BCV0220L^ACE	4YJNF59KE	147,900	131,190	115,480	100,820	87,390	75,110	64,080	54,210	45,550
BCV0270L^ACE	6YHNF68KE	172,750	153,630	135,410	118,480	102,800	88,490	75,510	63,880	53,590
BCV0300L^ACE	6YJNF84KE	205,480	183,250	162,480	142,820	124,320	107,290	91,880	78,100	65,910
BCV0400L+ACE	6YUNF10ME	255,620	227,110	200,310	175,270	152,150	131,060	112,110	95,160	80,310

R-454A		Capacity BTUH @ 95°F Ambient by SST								
Model	Compressor	0°F	-5°F	-10°F	-15°F	-20°F	-25°F	-30°F	-35°F	-40°F
BCV0120L^ACE	**4YBNF40KE**	**101,560**	**89,690**	**78,640**	**68,420**	**58,990**	**50,410**	**42,710**	**35,840**	**29,830**
BCV0150L^ACE	**4YHNF46KE**	**116,680**	**103,230**	**90,620**	**78,900**	**68,100**	**58,250**	**49,400**	**41,480**	**34,530**
BCV0220L^ACE	**4YJNF59KE**	**142,540**	**126,270**	**111,060**	**96,940**	**83,910**	**72,020**	**61,360**	**51,830**	**43,470**
BCV0270L^ACE	**6YHNF68KE**	**166,390**	**147,780**	**130,270**	**113,860**	**98,730**	**84,860**	**72,310**	**61,020**	**51,050**
BCV0300L^ACE	**6YJNF84KE**	**---**	**176,210**	**156,170**	**137,100**	**119,380**	**102,920**	**88,020**	**74,680**	**62,920**
BCV0400L+ACE	**6YUNF10ME**	**246,360**	**218,760**	**192,990**	**168,610**	**146,260**	**125,810**	**107,470**	**91,080**	**76,720**

R-454A		Capacity BTUH @ 100°F Ambient by SST								
Model	Compressor	0°F	-5°F	-10°F	-15°F	-20°F	-25°F	-30°F	-35°F	-40°F
BCV0120L^ACE	4YBNF40KE	97,620	86,160	75,530	65,610	56,500	48,210	40,780	34,150	28,340
BCV0150L^ACE	4YHNF46KE	112,260	99,230	87,070	75,710	65,260	55,730	47,160	39,500	32,780
BCV0220L^ACE	4YJNF59KE	137,120	121,390	106,700	93,040	80,450	68,970	58,660	49,470	41,420
BCV0270L^ACE	6YHNF68KE	159,750	142,010	125,130	109,290	94,620	81,240	69,120	58,210	48,550
BCV0300L^ACE	6YJNF84KE	---	---	---	131,630	114,410	98,530	84,220	71,320	59,970
BCV0400L+ACE	6YUNF10ME	237,010	210,440	185,530	162,000	140,370	120,630	102,890	87,030	73,160

R-454A		Capacity BTUH @ 110°F Ambient by SST								
Model	Compressor	0°F	-5°F	-10°F	-15°F	-20°F	-25°F	-30°F	-35°F	-40°F
BCV0120L^ACE	4YBNF40KE	---	79,120	69,220	60,010	51,550	43,850	36,950	30,820	25,450
BCV0150L^ACE	4YHNF46KE	---	91,270	79,920	69,350	59,610	50,740	42,750	35,610	29,340
BCV0220L^ACE	4YJNF59KE	---	---	---	85,290	73,580	62,930	53,360	44,860	37,410
BCV0270L^ACE	6YHNF68KE	---	---	---	---	86,620	74,150	62,840	52,670	43,680
BCV0300L^ACE	6YJNF84KE	---	---	---	---	---	---	76,670	64,730	54,210
BCV0400L+ACE	6YUNF10ME	---	---	---	---	128,770	110,360	93,880	79,120	66,210

Notes:

DEMAND COOLING IS REQUIRED FOR ALL APPLICATIONS

^ C = 208-230/3/60, D = 460/3/60, E = 575/3/60

+ D = 460/3/60, E = 575/3/60

For 50 cycle capacity, multiply values by .86

A2L PERFORMANCE DATA – R-454C

Low Temperature Models - Copeland Discus™ Compressors

Please consult AWEF table on page 71 to confirm DOE compliance per model

R-454C		Capacity BTUH @ 90°F Ambient by SST								
Model	Compressor	0°F	-5°F	-10°F	-15°F	-20°F	-25°F	-30°F	-35°F	-40°F
BCV0120L^ACE	4YBNF40KE	88,820	78,240	68,510	59,510	51,270	43,840	37,230	---	---
BCV0150L^ACE	4YHNF46KE	103,010	90,890	79,700	69,310	59,780	51,150	43,440	---	---
BCV0220L^ACE	4YJNF59KE	125,550	111,010	97,590	84,990	73,470	63,020	53,650	45,350	38,110
BCV0270L^ACE	6YHNF68KE	146,680	130,030	114,340	99,890	86,470	74,280	63,320	53,550	44,990
BCV0300L^ACE	6YJNF84KE	176,310	156,850	138,520	121,310	105,270	90,800	77,670	65,920	55,650
BCV0400L+ACE	6YUNF10ME	219,470	194,140	170,580	148,830	128,830	110,720	94,570	80,160	67,610

R-454C		Capacity BTUH @ 95°F Ambient by SST								
Model	Compressor	0°F	-5°F	-10°F	-15°F	-20°F	-25°F	-30°F	-35°F	-40°F
BCV0120L^ACE	**4YBNF40KE**	**85,510**	**75,250**	**65,850**	**57,150**	**49,180**	**42,010**	**35,630**	**---**	**---**
BCV0150L^ACE	**4YHNF46KE**	**99,210**	**87,470**	**76,600**	**66,590**	**57,370**	**49,020**	**41,570**	**---**	**---**
BCV0220L^ACE	**4YJNF59KE**	**120,860**	**106,830**	**93,780**	**81,640**	**70,510**	**60,420**	**51,400**	**43,420**	**36,470**
BCV0270L^ACE	**6YHNF68KE**	**141,050**	**124,950**	**109,820**	**95,910**	**82,930**	**71,200**	**60,630**	**51,250**	**43,050**
BCV0300L^ACE	**6YJNF84KE**	**169,400**	**150,650**	**132,980**	**116,400**	**101,010**	**87,070**	**74,410**	**63,140**	**53,320**
BCV0400L+ACE	**6YUNF10ME**	**211,470**	**186,880**	**164,170**	**143,110**	**123,730**	**106,220**	**90,640**	**76,750**	**64,680**

R-454C		Capacity BTUH @ 100°F Ambient by SST								
Model	Compressor	0°F	-5°F	-10°F	-15°F	-20°F	-25°F	-30°F	-35°F	-40°F
BCV0120L^ACE	4YBNF40KE	82,180	72,280	63,180	54,760	47,100	40,200	34,070	---	---
BCV0150L^ACE	4YHNF46KE	95,380	84,020	73,530	63,840	54,950	46,930	39,740	---	---
BCV0220L^ACE	4YJNF59KE	116,170	102,630	90,010	78,300	67,590	57,870	49,180	41,500	34,870
BCV0270L^ACE	6YHNF68KE	135,380	119,870	105,350	91,840	79,400	68,120	57,970	48,960	41,140
BCV0300L^ACE	6YJNF84KE	---	144,430	127,450	111,520	96,740	83,340	71,200	60,400	51,030
BCV0400L+ACE	6YUNF10ME	203,450	179,690	157,740	137,310	118,680	101,780	86,740	73,370	61,780

R-454C		Capacity BTUH @ 110°F Ambient by SST								
Model	Compressor	0°F	-5°F	-10°F	-15°F	-20°F	-25°F	-30°F	-35°F	-40°F
BCV0120L^ACE	4YBNF40KE	75,530	66,320	57,870	50,080	42,990	36,630	31,000	---	---
BCV0150L^ACE	4YHNF46KE	87,660	77,150	67,400	58,410	50,190	42,750	36,140	---	---
BCV0220L^ACE	4YJNF59KE	---	---	---	71,630	61,730	52,760	44,760	37,740	31,720
BCV0270L^ACE	6YHNF68KE	---	---	---	---	72,420	62,050	52,770	44,540	37,460
BCV0300L^ACE	6YJNF84KE	---	---	---	---	---	---	64,870	55,050	46,590
BCV0400L+ACE	6YUNF10ME	---	---	---	---	108,640	92,950	79,030	66,770	56,120

Notes:

DEMAND COOLING IS REQUIRED FOR ALL APPLICATIONS

^ C = 208-230/3/60, D = 460/3/60, E = 575/3/60

+ D = 460/3/60, E = 575/3/60

For 50 cycle capacity, multiply values by .86

A2L PERFORMANCE DATA – R-455A

Low Temperature Models - Copeland Discus™ Compressors

Please consult AWEF table on page 71 to confirm DOE compliance per model

R-455A		Capacity BTUH @ 90°F Ambient by SST								
Model	Compressor	0°F	-5°F	-10°F	-15°F	-20°F	-25°F	-30°F	-35°F	-40°F
BCV0120L^ACE	4YBNF40KE	91,680	80,570	70,310	60,850	52,210	44,410	37,450	---	---
BCV0150L^ACE	4YHNF46KE	106,320	93,620	81,840	70,920	60,920	51,820	---	---	---
BCV0220L^ACE	4YJNF59KE	129,640	114,330	100,210	87,070	75,010	64,070	54,270	45,550	---
BCV0270L^ACE	6YHNF68KE	151,920	134,230	117,730	102,420	88,340	75,510	63,980	53,660	44,560
BCV0300L^ACE	6YJNF84KE	182,290	161,750	142,420	124,280	107,570	92,240	78,520	66,290	55,630
BCV0400L+ACE	6YUNF10ME	224,870	198,760	174,360	151,820	131,120	112,290	95,450	80,450	67,400

R-455A		Capacity BTUH @ 95°F Ambient by SST								
Model	Compressor	0°F	-5°F	-10°F	-15°F	-20°F	-25°F	-30°F	-35°F	-40°F
BCV0120L^ACE	**4YBNF40KE**	**88,190**	**77,430**	**67,500**	**58,350**	**50,010**	**42,470**	**35,760**	**---**	**---**
BCV0150L^ACE	**4YHNF46KE**	**102,340**	**90,040**	**78,630**	**68,060**	**58,380**	**49,570**	**41,700**	**---**	**---**
BCV0220L^ACE	**4YJNF59KE**	**124,680**	**109,920**	**96,250**	**83,550**	**71,900**	**61,330**	**51,880**	**43,480**	**---**
BCV0270L^ACE	**6YHNF68KE**	**146,090**	**128,990**	**113,030**	**98,260**	**84,650**	**72,270**	**61,140**	**51,180**	**42,430**
BCV0300L^ACE	**6YJNF84KE**	**---**	**155,380**	**136,770**	**119,240**	**103,110**	**88,330**	**75,120**	**63,360**	**53,140**
BCV0400L+ACE	**6YUNF10ME**	**216,410**	**191,200**	**167,590**	**145,820**	**125,820**	**107,590**	**91,340**	**76,900**	**64,350**

R-455A		Capacity BTUH @ 100°F Ambient by SST								
Model	Compressor	0°F	-5°F	-10°F	-15°F	-20°F	-25°F	-30°F	-35°F	-40°F
BCV0120L^ACE	4YBNF40KE	84,680	74,280	64,690	55,860	47,820	40,540	34,080	---	---
BCV0150L^ACE	4YHNF46KE	98,340	86,460	75,430	65,190	55,840	47,330	39,730	---	---
BCV0220L^ACE	4YJNF59KE	119,810	105,560	92,310	80,040	68,790	58,600	49,510	41,430	---
BCV0270L^ACE	6YHNF68KE	140,250	123,780	108,410	94,140	80,990	69,070	58,320	48,750	40,350
BCV0300L^ACE	6YJNF84KE	---	---	131,130	114,280	98,650	84,480	71,760	60,480	50,700
BCV0400L+ACE	6YUNF10ME	208,000	183,700	160,930	139,810	120,520	102,970	87,290	73,410	61,350

R-455A		Capacity BTUH @ 110°F Ambient by SST								
Model	Compressor	0°F	-5°F	-10°F	-15°F	-20°F	-25°F	-30°F	-35°F	-40°F
BCV0120L^ACE	4YBNF40KE	---	---	---	50,910	43,460	36,760	30,810	---	---
BCV0150L^ACE	4YHNF46KE	---	---	69,030	59,520	50,810	42,920	35,870	---	---
BCV0220L^ACE	4YJNF59KE	---	---	---	---	62,680	53,240	44,840	37,420	31,050
BCV0270L^ACE	6YHNF68KE	---	---	---	---	---	62,750	52,850	44,020	36,310
BCV0300L^ACE	6YJNF84KE	---	---	---	---	---	---	---	54,920	46,020
BCV0400L+ACE	6YUNF10ME	---	---	---	---	---	93,820	79,360	66,570	55,550

Notes:

DEMAND COOLING IS REQUIRED FOR ALL APPLICATIONS

^ C = 208-230/3/60, D = 460/3/60, E = 575/3/60

+ D = 460/3/60, E = 575/3/60

For 50 cycle capacity, multiply values by .86

A1 PERFORMANCE DATA – R-404A/R-507A

Medium Temperature Models - Discus™ Compressors

Please consult AWEF table on page 70 to confirm DOE compliance per model

R-404A/R-507A		Capacity BTUH @ 90°F Ambient by SST								
Model	Compressor	40°F	35°F	30°F	25°F	20°F	15°F	10°F	0°F	-10°F
BCV0150M^ACD	3DS3R17ME	206,790	190,420	174,750	159,610	145,190	131,720	118,990	96,110	76,000
BCV0200M^ACD	4DBNR20ME	243,220	226,280	209,050	191,700	174,890	158,790	143,430	115,450	93,420
BCV0250M^ACD	4DHNR22ME	257,540	240,010	222,230	204,270	186,720	169,380	153,050	123,510	100,160
BCV0260M^ACD	4DHNR22ME	261,150	242,830	224,340	205,610	187,700	170,340	153,900	123,840	100,400
BCV0300M^ACD	4DJNR28ME	323,680	298,750	274,590	250,820	228,550	207,320	187,210	150,150	118,310
BCV0350M^ACD	6DHNR35ME	402,010	371,610	342,040	312,990	285,700	260,020	235,730	190,650	-
BCV0400M*ACD	6DJNR40ME	467,000	433,040	399,670	366,690	335,570	305,760	277,530	225,320	-
BCV0500M+ACD	6DUNR49ME	548,620	511,420	475,550	437,730	401,280	365,620	331,180	269,840	222,360

R-404A/R-507A		Capacity BTUH @ 95°F Ambient by SST								
Model	Compressor	40°F	35°F	30°F	25°F	20°F	15°F	10°F	0°F	-10°F
BCV0150M^ACD	**3DS3R17ME**	**197,530**	**181,810**	**166,790**	**152,680**	**139,010**	**126,270**	**114,090**	**92,220**	**72,900**
BCV0200M^ACD	**4DBNR20ME**	**231,700**	**215,610**	**199,350**	**183,190**	**166,910**	**151,520**	**136,830**	**110,090**	**89,080**
BCV0250M^ACD	**4DHNR22ME**	**245,210**	**228,060**	**211,670**	**194,800**	**177,650**	**161,580**	**146,180**	**117,960**	**95,530**
BCV0260M^ACD	**4DHNR22ME**	**249,060**	**231,690**	**214,110**	**196,270**	**179,170**	**162,620**	**146,830**	**118,110**	**95,760**
BCV0300M^ACD	**4DJNR28ME**	**307,720**	**284,340**	**261,380**	**238,930**	**217,770**	**197,870**	**178,450**	**143,340**	**113,160**
BCV0350M^ACD	**6DHNR35ME**	**382,280**	**353,730**	**325,760**	**298,100**	**272,590**	**248,150**	**225,000**	**181,840**	**-**
BCV0400M*ACD	**6DJNR40ME**	**444,650**	**412,680**	**381,180**	**349,940**	**320,450**	**292,160**	**265,210**	**215,280**	**-**
BCV0500M+ACD	**6DUNR49ME**	**519,610**	**487,660**	**453,050**	**417,230**	**382,740**	**348,810**	**316,170**	**257,630**	**212,210**

R-404A/R-507A		Capacity BTUH @ 100°F Ambient by SST								
New Model	Compressor	40°F	35°F	30°F	25°F	20°F	15°F	10°F	0°F	-10°F
BCV0150M^ACD	3DS3R17ME	187,520	173,380	159,040	145,720	132,740	120,650	109,190	88,350	69,830
BCV0200M^ACD	4DBNR20ME	220,100	205,030	189,690	173,930	158,950	144,510	130,290	104,780	84,760
BCV0250M^ACD	4DHNR22ME	232,180	217,200	201,290	185,370	169,110	153,820	139,160	112,170	91,000
BCV0260M^ACD	4DHNR22ME	236,960	220,570	203,920	186,990	170,730	154,930	139,840	112,440	91,180
BCV0300M^ACD	4DJNR28ME	291,810	269,720	248,200	226,950	207,040	188,160	169,950	136,720	108,090
BCV0350M^ACD	6DHNR35ME	362,380	335,480	309,310	283,320	259,200	236,480	214,120	173,030	-
BCV0400M*ACD	6DJNR40ME	422,050	392,030	362,420	332,950	305,090	278,700	252,740	205,270	-
BCV0500M+ACD	6DUNR49ME	492,480	462,600	430,170	396,360	363,680	331,800	301,310	245,150	201,940

R-404A/R-507A		Capacity BTUH @ 110°F Ambient by SST								
Model	Compressor	40°F	35°F	30°F	25°F	20°F	15°F	10°F	0°F	-10°F
BCV0150M^ACD	3DS3R17ME	168,570	155,580	143,620	131,710	120,480	109,600	99,370	80,660	63,760
BCV0200M^ACD	4DBNR20ME	-	-	-	156,480	143,100	130,130	117,310	94,290	76,190
BCV0250M^ACD	4DHNR22ME	-	-	-	166,270	152,050	138,410	125,210	100,900	81,850
BCV0260M^ACD	4DHNR22ME	-	-	183,560	168,480	153,910	139,860	126,120	101,400	82,070
BCV0300M^ACD	4DJNR28ME	-	240,480	221,060	202,990	185,720	168,830	152,440	123,370	98,170
BCV0350M^ACD	6DHNR35ME	-	-	274,820	253,100	231,890	211,780	192,010	155,460	-
BCV0400M*ACD	6DJNR40ME	-	-	323,760	297,900	273,490	250,160	227,250	185,080	-
BCV0500M+ACD	6DUNR49ME	437,350	411,820	383,160	353,480	325,130	297,000	270,090	219,680	181,370

Notes:
^ C = 208-230/3/60, D = 460/3/60, E = 575/3/60
* K = 230/3/60
+D = 460/3/60, E = 575/3/60
For 50 cycle capacity, multiply values by .86

A1 PERFORMANCE DATA – R-448A/R-449A

Medium Temperature Models - Discus™ Compressors

Please consult AWEF table on page 70 to confirm DOE compliance per model

R-448A/R-449A		Capacity BTUH @ 90°F Ambient by SST								
Model	Compressor	40°F	35°F	30°F	25°F	20°F	15°F	10°F	0°F	-10°F
BCV0150M^ACD	3DS3R17ME	204,530	186,980	170,060	153,680	138,060	123,460	109,680	85,020	64,180
BCV0200M^ACD	4DBNR20ME	251,140	229,210	208,210	188,330	169,790	152,330	136,030	106,870	81,770
BCV0250M^ACD	4DHNR22ME	270,680	247,660	225,480	204,360	184,420	165,910	148,340	116,750	89,380
BCV0260M^ACD	4DHNR22ME	272,560	248,950	226,350	204,940	184,800	166,170	148,530	116,930	89,580
BCV0300M^ACD	4DJNR28ME	324,730	298,320	272,420	247,420	223,560	200,490	178,370	137,580	101,140
BCV0350M^ACD	6DHNR35ME	397,910	367,050	336,180	305,710	276,250	247,830	220,770	172,140	132,610
BCV0400M*ACD	6DJNR40ME	473,990	436,910	399,920	363,530	328,250	294,250	261,970	204,270	157,940
BCV0500M+ACD	6DUNR49ME	562,000	518,180	475,780	432,730	391,100	350,970	312,500	242,970	185,090

R-448A/R-449A		Capacity BTUH @ 95°F Ambient by SST								
Model	Compressor	40°F	35°F	30°F	25°F	20°F	15°F	10°F	0°F	-10°F
BCV0150M^ACD	**3DS3R17ME**	**197,220**	**180,440**	**164,230**	**148,490**	**133,440**	**119,290**	**105,870**	**81,750**	**61,070**
BCV0200M^ACD	**4DBNR20ME**	**241,820**	**220,780**	**200,610**	**181,480**	**163,630**	**146,770**	**130,940**	**102,850**	**78,540**
BCV0250M^ACD	**4DHNR22ME**	**260,900**	**238,330**	**217,070**	**196,790**	**177,590**	**159,790**	**142,840**	**112,390**	**85,850**
BCV0260M^ACD	**4DHNR22ME**	**262,510**	**239,840**	**218,100**	**197,480**	**178,090**	**160,100**	**143,060**	**112,490**	**86,030**
BCV0300M^ACD	**4DJNR28ME**	**312,320**	**286,930**	**262,110**	**238,050**	**215,110**	**192,850**	**171,490**	**132,170**	**96,870**
BCV0350M^ACD	**6DHNR35ME**	**385,120**	**355,560**	**325,850**	**296,760**	**268,070**	**240,480**	**214,050**	**166,570**	**127,560**
BCV0400M*ACD	**6DJNR40ME**	**458,580**	**423,160**	**387,650**	**352,550**	**318,470**	**285,530**	**254,040**	**197,810**	**152,210**
BCV0500M+ACD	**6DUNR49ME**	**542,800**	**501,890**	**460,630**	**419,600**	**378,970**	**340,050**	**302,650**	**234,550**	**177,260**

R-448A/R-449A		Capacity BTUH @ 100°F Ambient by SST								
New Model	Compressor	40°F	35°F	30°F	25°F	20°F	15°F	10°F	0°F	-10°F
BCV0150M^ACD	3DS3R17ME	189,920	174,110	158,410	143,290	128,760	115,060	102,050	78,410	57,900
BCV0200M^ACD	4DBNR20ME	232,420	212,300	192,940	174,580	157,260	141,010	125,840	98,730	75,210
BCV0250M^ACD	4DHNR22ME	250,530	228,960	208,600	189,160	170,690	153,400	137,150	107,740	82,160
BCV0260M^ACD	4DHNR22ME	252,850	230,640	209,760	189,960	171,280	153,960	137,510	107,970	82,360
BCV0300M^ACD	4DJNR28ME	299,600	275,240	251,450	228,390	206,360	184,910	164,470	126,500	92,440
BCV0350M^ACD	6DHNR35ME	372,070	343,850	315,460	287,470	259,750	233,000	207,300	160,830	122,360
BCV0400M*ACD	6DJNR40ME	443,080	409,190	375,160	341,410	308,570	276,680	246,120	191,210	146,320
BCV0500M+ACD	6DUNR49ME	523,690	484,670	445,130	405,300	366,560	328,900	292,640	225,670	169,120

R-448A/R-449A		Capacity BTUH @ 110°F Ambient by SST								
Model	Compressor	40°F	35°F	30°F	25°F	20°F	15°F	10°F	0°F	-10°F
BCV0150M^ACD	3DS3R17ME	-	161,130	146,760	132,880	119,480	106,640	94,350	71,650	51,430
BCV0200M^ACD	4DBNR20ME	-	-	-	160,430	144,660	129,670	115,620	90,260	68,300
BCV0250M^ACD	4DHNR22ME	-	-	-	-	156,590	140,830	125,730	98,390	74,520
BCV0260M^ACD	4DHNR22ME	-	-	-	174,710	157,480	141,450	126,130	98,770	74,780
BCV0300M^ACD	4DJNR28ME	-	-	229,410	208,320	188,110	168,220	149,490	114,650	83,260
BCV0350M^ACD	6DHNR35ME	-	-	-	268,110	242,560	217,510	193,280	148,860	111,430
BCV0400M*ACD	6DJNR40ME	-	-	-	-	288,230	258,450	229,740	177,480	134,000
BCV0500M+ACD	6DUNR49ME	-	-	-	-	341,120	305,630	271,300	207,490	152,120

Notes:

LOW SUCTION TEMPERATURE APPLICATIONS IN THESE RANGES REQUIRE THE ADDITION OF A HEAD FAN

^ C = 208-230/3/60, D = 460/3/60, E = 575/3/60

* K = 230/3/60

+D = 460/3/60, E = 575/3/60

For 50 cycle capacity, multiply values by .86

A1 PERFORMANCE DATA – R-407A/R-407F

Medium Temperature Models - Discus™ Compressors

Please consult AWEF table on page 70 to confirm DOE compliance per model

R-407A/R-407F		Capacity BTUH @ 90°F Ambient by SST								
Model	Compressor	40°F	35°F	30°F	25°F	20°F	15°F	10°F	0°F	-10°F
BCV0150M^ACD	3DS3R17ME	208,650	190,750	173,400	156,480	140,400	125,330	111,100	86,120	65,860
BCV0200M^ACD	4DBNR20ME	253,250	231,330	210,380	190,560	171,910	154,720	138,490	109,420	84,130
BCV0250M^ACD	4DHNR22ME	272,580	248,930	226,940	206,010	186,220	167,790	150,620	119,330	91,890
BCV0260M^ACD	4DHNR22ME	275,910	251,740	228,630	207,180	187,110	168,600	151,020	119,510	92,050
BCV0300M^ACD	4DJNR28ME	329,310	301,700	275,470	250,270	226,160	203,410	181,400	141,370	105,900
BCV0350M^ACD	6DHNR35ME	403,010	371,680	340,500	309,910	280,160	251,940	224,930	176,350	136,510
BCV0400M*ACD	6DJNR40ME	479,900	442,000	404,750	368,170	332,960	298,970	266,720	209,090	162,460
BCV0500M+ACD	6DUNR49ME	580,420	535,010	490,200	446,220	402,910	361,930	322,790	252,100	192,590

R-407A/R-407F		Capacity BTUH @ 95°F Ambient by SST								
Model	Compressor	40°F	35°F	30°F	25°F	20°F	15°F	10°F	0°F	-10°F
BCV0150M^ACD	**3DS3R17ME**	**200,500**	**183,350**	**166,850**	**150,630**	**135,080**	**120,590**	**106,870**	**82,580**	**62,630**
BCV0200M^ACD	**4DBNR20ME**	**243,150**	**222,190**	**202,100**	**183,020**	**165,160**	**148,620**	**132,970**	**104,990**	**80,610**
BCV0250M^ACD	**4DHNR22ME**	**261,580**	**238,910**	**217,860**	**197,800**	**178,790**	**161,080**	**144,580**	**114,480**	**87,920**
BCV0260M^ACD	**4DHNR22ME**	**265,080**	**241,870**	**219,660**	**199,070**	**179,770**	**161,960**	**145,030**	**114,660**	**88,180**
BCV0300M^ACD	**4DJNR28ME**	**315,650**	**289,170**	**264,170**	**240,060**	**217,280**	**195,230**	**174,220**	**135,940**	**102,190**
BCV0350M^ACD	**6DHNR35ME**	**388,820**	**358,880**	**328,980**	**299,520**	**271,170**	**243,710**	**217,510**	**170,120**	**130,960**
BCV0400M*ACD	**6DJNR40ME**	**463,420**	**426,580**	**390,930**	**355,850**	**321,980**	**289,190**	**257,970**	**201,880**	**156,100**
BCV0500M+ACD	**6DUNR49ME**	**559,600**	**516,760**	**473,400**	**431,250**	**389,590**	**350,290**	**312,190**	**242,700**	**184,220**

R-407A/R-407F		Capacity BTUH @ 100°F Ambient by SST								
New Model	Compressor	40°F	35°F	30°F	25°F	20°F	15°F	10°F	0°F	-10°F
BCV0150M^ACD	3DS3R17ME	192,390	176,090	160,330	144,820	129,900	115,920	102,660	79,030	59,390
BCV0200M^ACD	4DBNR20ME	233,540	213,010	193,780	175,490	158,350	142,480	127,290	100,470	76,990
BCV0250M^ACD	4DHNR22ME	-	229,340	208,720	189,530	171,330	154,330	138,470	109,430	84,000
BCV0260M^ACD	4DHNR22ME	253,990	231,510	210,680	190,930	172,380	155,260	138,970	109,720	84,230
BCV0300M^ACD	4DJNR28ME	301,750	276,480	252,660	229,680	207,960	186,910	166,850	130,520	98,570
BCV0350M^ACD	6DHNR35ME	374,470	345,920	317,240	289,160	261,890	235,370	209,860	163,800	125,260
BCV0400M*ACD	6DJNR40ME	445,080	411,160	377,050	343,460	310,920	279,300	248,920	194,550	149,610
BCV0500M+ACD	6DUNR49ME	538,790	497,930	456,940	416,180	376,100	337,790	300.920	233,360	175,290

R-407A/R-407F		Capacity BTUH @ 110°F Ambient by SST								
Model	Compressor	40°F	35°F	30°F	25°F	20°F	15°F	10°F	0°F	-10°F
BCV0150M^ACD	3DS3R17ME	-	161,720	147,420	133,300	119,670	106,670	94,310	71,960	52,940
BCV0200M^ACD	4DBNR20ME	-	-	-	160,350	144,870	130,070	116,270	91,280	69,550
BCV0250M^ACD	4DHNR22ME	-	-	-	-	156,270	140,690	126,110	99,310	75,790
BCV0260M^ACD	4DHNR22ME	-	-	-	174,500	157,480	141,730	126,620	99,780	76,070
BCV0300M^ACD	4DJNR28ME	-	-	-	208,580	189,030	170,050	152,140	119,760	91,540
BCV0350M^ACD	6DHNR35ME	-	-	-	268,040	242,940	218,270	194,430	150,740	113,410
BCV0400M*ACD	6DJNR40ME	-	-	-	318,310	288,440	259,160	230,920	179,470	136,230
BCV0500M+ACD	6DUNR49ME	-	-	422,640	384,740	348,770	313,060	278,040	213,680	157,070

Notes:

LOW SUCTION TEMPERATURE APPLICATIONS IN THESE RANGES REQUIRE THE ADDITION OF A HEAD FAN

^ C = 208-230/3/60, D = 460/3/60, E = 575/3/60

* K = 230/3/60

+D = 460/3/60, E = 575/3/60

For 50 cycle capacity, multiply values by .86

A1 PERFORMANCE DATA – R-407C

Medium Temperature Models - Discus™ Compressors

Please consult AWEF table on page 70 to confirm DOE compliance per model

R-407C		Capacity BTUH @ 90°F Ambient by SST								
Model	Compressor	40°F	35°F	30°F	25°F	20°F	15°F	10°F	0°F	-10°F
BCV0150M^ACD	3DS3R17ME	185,130	168,750	153,040	137,990	123,830	110,560	98,270	76,230	57,660
BCV0200M^ACD	4DBNR20ME	225,570	204,890	185,010	166,530	149,010	132,310	115,950	83,870	50,950
BCV0250M^ACD	4DHNR22ME	-	-	204,330	184,520	165,930	148,390	131,990	102,570	78,440
BCV0260M^ACD	4DHNR22ME	-	-	206,040	185,920	166,650	148,840	132,200	102,760	78,660
BCV0300M^ACD	4DJNR28ME	-	-	245,160	221,360	199,060	178,330	158,840	123,840	92,370
BCV0350M^ACD	6DHNR35ME	363,520	328,300	296,160	266,870	240,190	215,500	192,640	149,800	106,690
BCV0400M*ACD	6DJNR40ME	451,090	400,410	357,530	318,170	285,310	256,920	231,400	184,030	130,230
BCV0500M+ACD	6DUNR49ME	523,600	470,100	421,180	373,820	332,250	294,490	261,770	210,110	177,490

R-407C		Capacity BTUH @ 95°F Ambient by SST								
Model	Compressor	40°F	35°F	30°F	25°F	20°F	15°F	10°F	0°F	-10°F
BCV0150M^ACD	**3DS3R17ME**	**179,140**	**163,370**	**148,260**	**133,710**	**120,040**	**107,070**	**95,020**	**73,240**	**54,530**
BCV0200M^ACD	**4DBNR20ME**	**216,750**	**196,780**	**177,710**	**159,910**	**143,020**	**126,980**	**111,220**	**80,700**	**49,350**
BCV0250M^ACD	**4DHNR22ME**	**-**	**-**	**195,770**	**177,080**	**159,520**	**142,830**	**127,100**	**98,640**	**74,680**
BCV0260M^ACD	**4DHNR22ME**	**-**	**-**	**197,380**	**178,130**	**160,180**	**143,240**	**127,270**	**98,840**	**74,920**
BCV0300M^ACD	**4DJNR28ME**	**-**	**-**	**235,290**	**212,970**	**191,910**	**172,300**	**153,720**	**119,840**	**88,520**
BCV0350M^ACD	**6DHNR35ME**	**349,430**	**315,810**	**285,360**	**257,400**	**231,860**	**207,950**	**185,820**	**143,980**	**100,930**
BCV0400M*ACD	**6DJNR40ME**	**424,640**	**376,750**	**336,680**	**299,960**	**269,680**	**243,310**	**220,340**	**178,070**	**128,840**
BCV0500M+ACD	**6DUNR49ME**	**494,810**	**443,860**	**397,470**	**353,040**	**314,400**	**279,570**	**249,430**	**204,550**	**179,650**

R-407C		Capacity BTUH @ 100°F Ambient by SST								
New Model	Compressor	40°F	35°F	30°F	25°F	20°F	15°F	10°F	0°F	-10°F
BCV0150M^ACD	3DS3R17ME	173,210	158,060	143,490	129,330	116,010	103,490	91,630	69,990	51,130
BCV0200M^ACD	4DBNR20ME	208,070	188,860	170,520	153,440	137,250	121,840	106,840	77,760	48,020
BCV0250M^ACD	4DHNR22ME	-	-	187,540	169,970	153,350	137,550	122,380	94,820	70,970
BCV0260M^ACD	4DHNR22ME	-	-	189,030	170,940	153,960	137,960	122,630	95,000	71,210
BCV0300M^ACD	4DJNR28ME	-	-	225,850	204,890	185,250	166,480	148,830	116,000	84,790
BCV0350M^ACD	6DHNR35ME	335,140	303,280	274,340	247,680	223,240	200,290	178,790	137,800	94,880
BCV0400M*ACD	6DJNR40ME	397,640	352,460	315,380	281,450	254,330	230,110	209,750	173,050	129,430
BCV0500M+ACD	6DUNR49ME	465,750	417,500	374,090	332,450	296,730	265,010	238,090	200,370	184,180

R-407C		Capacity BTUH @ 110°F Ambient by SST								
Model	Compressor	40°F	35°F	30°F	25°F	20°F	15°F	10°F	0°F	-10°F
BCV0150M^ACD	3DS3R17ME	161,490	147,340	133,750	120,580	107,810	95,810	84,290	-	43,510
BCV0200M^ACD	4DBNR20ME	-	-	156,590	141,010	126,380	112,360	98,750	72,650	46,220
BCV0250M^ACD	4DHNR22ME	-	-	-	156,740	141,930	127,690	113,700	87,720	-
BCV0260M^ACD	4DHNR22ME	-	-	173,520	157,590	142,420	127,920	113,840	87,760	64,160
BCV0300M^ACD	4DJNR28ME	-	-	208,120	189,830	172,490	155,850	139,750	108,830	77,840
BCV0350M^ACD	6DHNR35ME	-	-	251,700	227,840	205,190	184,160	163,930	124,420	82,090
BCV0400M*ACD	6DJNR40ME	-	303,390	271,870	244,020	221,930	204,180	189,870	166,420	136,940
BCV0500M+ACD	6DUNR49ME	-	-	327,520	292,090	262,680	237,360	218,220	196,680	200,310

Notes:

LOW SUCTION TEMPERATURE APPLICATIONS IN THESE RANGES REQUIRE THE ADDITION OF A HEAD FAN

^ C = 208-230/3/60, D = 460/3/60, E = 575/3/60

* K = 230/3/60

+D = 460/3/60, E = 575/3/60

For 50 cycle capacity, multiply values by .86

A1 PERFORMANCE DATA – R-404A/R-507A

Medium Temperature High Efficiency Models - Discus™ Compressors

Please consult AWEF table on page 70 to confirm DOE compliance per model

R-404A/R-507A		Capacity BTUH @ 90°F Ambient by SST								
Model	Compressor	40°F	35°F	30°F	25°F	20°F	15°F	10°F	0°F	-10°F
BCV0151M^ACD	3DS3R17ME	201,510	185,890	170,550	156,200	142,480	129,660	117,350	95,000	75,360
BCV0201M^ACD	4DBNR20ME	258,520	239,250	220,190	200,920	182,480	164,710	148,120	118,500	95,300
BCV0251M^ACD	4DHNR22ME	272,900	252,770	233,050	213,410	194,470	175,730	158,260	126,970	102,360
BCV0301M^ACD	4DJNR28ME	351,690	322,700	294,280	267,380	241,860	218,170	195,790	155,630	121,340
BCV0351M^ACD	6DHNR35ME	431,100	396,440	362,720	330,810	299,820	271,580	244,520	196,490	-
BCV0401M*ACD	6DJNR40ME	515,850	473,980	433,590	394,930	358,500	324,480	292,370	235,120	-

R-404A/R-507A		Capacity BTUH @ 95°F Ambient by SST								
Model	Compressor	40°F	35°F	30°F	25°F	20°F	15°F	10°F	0°F	-10°F
BCV0151M^ACD	**3DS3R17ME**	**192,030**	**177,340**	**162,930**	**149,330**	**136,380**	**124,120**	**112,480**	**91,130**	**72,280**
BCV0201M^ACD	**4DBNR20ME**	**247,090**	**228,620**	**210,290**	**191,820**	**174,250**	**157,420**	**141,370**	**113,030**	**90,880**
BCV0251M^ACD	**4DHNR22ME**	**260,400**	**241,330**	**222,480**	**203,850**	**185,720**	**167,930**	**151,060**	**121,140**	**97,670**
BCV0301M^ACD	**4DJNR28ME**	**336,170**	**308,060**	**281,160**	**255,240**	**231,070**	**208,300**	**186,930**	**148,620**	**116,030**
BCV0351M^ACD	**6DHNR35ME**	**410,830**	**377,980**	**346,020**	**315,890**	**286,570**	**259,330**	**233,730**	**187,620**	**-**
BCV0401M*ACD	**6DJNR40ME**	**493,910**	**453,620**	**415,230**	**378,350**	**343,660**	**310,770**	**280,040**	**224,930**	**-**

R-404A/R-507A		Capacity BTUH @ 100°F Ambient by SST								
Model	Compressor	40°F	35°F	30°F	25°F	20°F	15°F	10°F	0°F	-10°F
BCV0151M^ACD	3DS3R17ME	182,530	168,420	155,210	142,470	130,160	118,500	107,560	87,340	69,230
BCV0201M^ACD	4DBNR20ME	235,650	218,010	200,630	183,190	166,180	149,940	134,790	107,670	86,520
BCV0251M^ACD	4DHNR22ME	247,430	229,740	212,070	194,630	177,030	160,180	143,960	115,390	93,040
BCV0301M^ACD	4DJNR28ME	320,000	293,020	267,590	243,330	220,150	198,490	178,140	141,730	110,840
BCV0351M^ACD	6DHNR35ME	389,940	359,130	329,080	300,610	273,100	247,190	222,730	178,740	-
BCV0401M*ACD	6DJNR40ME	471,270	433,630	396,730	361,850	328,200	297,110	267,650	214,880	-

R-404A/R-507A		Capacity BTUH @ 110°F Ambient by SST								
Model	Compressor	40°F	35°F	30°F	25°F	20°F	15°F	10°F	0°F	-10°F
BCV0151M^ACD	3DS3R17ME	-	151,230	139,790	128,750	117,920	107,670	97,770	79,670	63,170
BCV0201M^ACD	4DBNR20ME	212,790	197,370	181,330	165,580	150,290	135,790	121,840	97,120	77,930
BCV0251M^ACD	4DHNR22ME	-	207,090	191,290	175,640	159,890	144,550	129,960	104,120	83,840
BCV0301M^ACD	4DJNR28ME	286,800	263,510	240,490	219,040	198,390	179,000	160,770	128,190	100,700
BCV0351M^ACD	6DHNR35ME	348,230	320,840	294,970	269,850	245,220	222,300	200,700	160,930	-
BCV00401M*ACD	6DJNR40ME	424,960	391,430	358,580	327,540	297,550	269,240	242,610	194,680	-

Notes:
^ C = 208-230/3/60, D = 460/3/60, E = 575/3/60
* K = 230/3/60
For 50 cycle capacity, multiply values by .86

A1 PERFORMANCE DATA – R-448A/R-449A

Medium Temperature High Efficiency Models - Discus™ Compressors

Please consult AWEF table on page 70 to confirm DOE compliance per model

R-448A/R-449A		Capacity BTUH @ 90°F Ambient by SST								
Model	Compressor	40°F	35°F	30°F	25°F	20°F	15°F	10°F	0°F	-10°F
BCV0151M^ACD	3DS3R17ME	200,380	183,660	167,340	151,700	136,570	122,190	108,800	84,340	63,640
BCV0201M^ACD	4DBNR20ME	261,680	237,690	214,810	193,300	173,700	155,350	138,480	108,480	82,800
BCV0251M^ACD	4DHNR22ME	282,570	257,200	232,980	210,470	189,200	169,450	151,200	118,580	90,600
BCV0301M^ACD	4DJNR28ME	342,860	313,030	284,340	256,990	231,000	206,450	183,280	140,690	103,000
BCV0351M^ACD	6DHNR35ME	415,340	380,950	346,970	314,020	282,370	252,380	224,150	174,210	134,220
BCV0401M*ACD	6DJNR40ME	501,950	458,830	417,010	376,460	337,810	301,440	267,460	207,780	160,720

R-448A/R-449A		Capacity BTUH @ 95°F Ambient by SST								
Model	Compressor	40°F	35°F	30°F	25°F	20°F	15°F	10°F	0°F	-10°F
BCV0151M^ACD	**3DS3R17ME**	**193,140**	**177,170**	**161,540**	**146,520**	**131,920**	**118,030**	**104,940**	**81,080**	**60,520**
BCV0201M^ACD	**4DBNR20ME**	**252,650**	**229,260**	**207,360**	**186,700**	**167,590**	**149,910**	**133,510**	**104,560**	**79,650**
BCV0251M^ACD	**4DHNR22ME**	**272,420**	**247,950**	**224,780**	**203,040**	**182,520**	**163,450**	**145,770**	**114,270**	**87,090**
BCV0301M^ACD	**4DJNR28ME**	**331,390**	**302,510**	**274,780**	**248,180**	**222,970**	**199,230**	**176,680**	**135,380**	**98,770**
BCV0351M^ACD	**6DHNR35ME**	**402,580**	**369,530**	**336,780**	**304,970**	**274,240**	**245,150**	**217,670**	**168,740**	**129,270**
BCV0401M*ACD	**6DJNR40ME**	**486,850**	**445,420**	**405,010**	**365,720**	**328,250**	**292,930**	**259,800**	**201,510**	**155,150**

R-448A/R-449A		Capacity BTUH @ 100°F Ambient by SST								
Model	Compressor	40°F	35°F	30°F	25°F	20°F	15°F	10°F	0°F	-10°F
BCV0151M^ACD	3DS3R17ME	185,940	170,680	155,740	141,310	127,260	113,840	101,100	77,740	57,340
BCV0201M^ACD	4DBNR20ME	243,730	221,190	199,910	180,050	161,440	144,380	128,640	100,550	76,410
BCV0251M^ACD	4DHNR22ME	262,130	238,780	216,470	195,550	175,750	157,350	140,260	109,790	83,470
BCV0301M^ACD	4DJNR28ME	319,430	291,350	264,830	238,970	214,580	191,690	169,870	129,880	94,450
BCV0351M^ACD	6DHNR35ME	389,720	358,010	326,510	295,800	266,140	237,820	211,040	163,130	124,160
BCV0401M*ACD	6DJNR40ME	471,780	431,980	392,840	354,900	318,640	284,370	252,120	195,110	149,430

R-448A/R-449A		Capacity BTUH @ 110°F Ambient by SST								
Model	Compressor	40°F	35°F	30°F	25°F	20°F	15°F	10°F	0°F	-10°F
BCV0151M^ACD	3DS3R17ME	-	-	144,230	130,980	117,970	105,390	93,360	70,970	50,870
BCV0201M^ACD	4DBNR20ME	225,100	204,510	184,710	166,370	149,080	133,180	118,520	92,250	69,580
BCV0251M^ACD	4DHNR22ME	-	-	199,640	180,320	161,970	145,030	128,990	100,600	75,950
BCV0301M^ACD	4DJNR28ME	294,360	268,510	243,540	219,730	197,250	175,850	155,550	118,380	85,470
BCV0351M^ACD	6DHNR35ME	363,670	334,560	305,610	277,000	249,390	222,730	197,350	151,500	113,410
BCV0401M*ACD	6DJNR40ME	441,080	404,670	368,420	333,130	299,140	266,940	236,410	181,890	137,540

Notes:

LOW SUCTION TEMPERATURE APPLICATIONS IN THESE RANGES REQUIRE THE ADDITION OF A HEAD FAN

^ C = 208-230/3/60, D = 460/3/60, E = 575/3/60

* K = 230/3/60

For 50 cycle capacity, multiply values by .86

A1 PERFORMANCE DATA – R-407A/R-407F

Medium Temperature High Efficiency Models - Discus™ Compressors

Please consult AWEF table on page 70 to confirm DOE compliance per model

R-407A/R-407F		Capacity BTUH @ 90°F Ambient by SST								
Model	Compressor	40°F	35°F	30°F	25°F	20°F	15°F	10°F	0°F	-10°F
BCV0151M^ACD	3DS3R17ME	203,560	186,550	169,870	153,730	138,350	123,650	109,890	85,290	65,240
BCV0201M^ACD	4DBNR20ME	267,310	242,580	219,430	197,600	177,560	158,950	141,800	111,590	85,430
BCV0251M^ACD	4DHNR22ME	286,800	261,170	236,840	214,210	192,790	172,740	154,630	121,780	93,430
BCV0301M^ACD	4DJNR28ME	353,420	321,960	291,860	263,470	236,610	211,570	187,900	145,070	107,630
BCV0351M^ACD	6DHNR35ME	424,660	389,630	354,800	321,220	288,940	258,620	230,030	179,470	138,720
BCV0401M*ACD	6DJNR40ME	518,430	473,220	429,380	387,370	347,500	310,170	275,330	214,570	166,400

R-407A/R-407F		Capacity BTUH @ 95°F Ambient by SST								
Model	Compressor	40°F	35°F	30°F	25°F	20°F	15°F	10°F	0°F	-10°F
BCV0151M^ACD	**3DS3R17ME**	**195,560**	**179,360**	**163,420**	**148,130**	**133,160**	**119,010**	**105,620**	**81,770**	**62,030**
BCV0201M^ACD	**4DBNR20ME**	**257,330**	**233,420**	**211,160**	**190,070**	**170,750**	**152,850**	**136,370**	**107,220**	**81,970**
BCV0251M^ACD	**4DHNR22ME**	**275,760**	**251,150**	**227,740**	**205,780**	**185,360**	**166,130**	**148,520**	**116,930**	**89,580**
BCV0301M^ACD	**4DJNR28ME**	**340,120**	**309,830**	**280,860**	**253,440**	**227,700**	**203,340**	**180,740**	**139,610**	**103,820**
BCV0351M^ACD	**6DHNR35ME**	**410,130**	**376,480**	**343,150**	**310,770**	**279,710**	**250,330**	**222,690**	**173,320**	**133,210**
BCV0401M*ACD	**6DJNR40ME**	**500,910**	**457,330**	**415,520**	**374,910**	**336,530**	**300,320**	**266,600**	**207,400**	**160,130**

R-407A/R-407F		Capacity BTUH @ 100°F Ambient by SST								
Model	Compressor	40°F	35°F	30°F	25°F	20°F	15°F	10°F	0°F	-10°F
BCV0151M^ACD	3DS3R17ME	187,600	172,180	157,000	142,200	128,000	114,300	101,430	78,230	58,800
BCV0201M^ACD	4DBNR20ME	247,160	224,570	202,930	182,650	163,950	146,790	130,880	102,760	78,430
BCV0251M^ACD	4DHNR22ME	264,640	241,090	218,650	197,770	177,820	159,470	142,450	112,100	85,650
BCV0301M^ACD	4DJNR28ME	326,480	297,390	269,670	243,190	218,310	195,260	173,470	134,150	100,120
BCV0351M^ACD	6DHNR35ME	395,380	363,020	331,390	300,290	270,480	242,030	215,120	167,030	127,540
BCV0401M*ACD	6DJNR40ME	483,340	441,700	401,600	362,410	325,390	290,530	257,820	200,150	153,740

R-407A/R-407F		Capacity BTUH @ 110°F Ambient by SST								
Model	Compressor	40°F	35°F	30°F	25°F	20°F	15°F	10°F	0°F	-10°F
BCV0151M^ACD	3DS3R17ME	-	-	144,310	130,960	117,790	105,210	93,130	71,200	52,390
BCV0201M^ACD	4DBNR20ME	227,090	206,280	186,300	167,720	150,360	134,450	119,850	93,700	71,080
BCV0251M^ACD	4DHNR22ME	-	-	200,310	181,030	162,790	146,000	130,140	102,060	77,510
BCV0301M^ACD	4DJNR28ME	298,350	271,610	246,120	222,100	199,500	178,540	158,730	123,250	92,950
BCV0351M^ACD	6DHNR35ME	-	336,510	307,640	278,910	251,570	225,010	199,830	154,180	115,800
BCV0401M*ACD	6DJNR40ME	448,390	410,530	373,360	337,570	303,190	270,670	240,110	185,420	140,610

Notes:

LOW SUCTION TEMPERATURE APPLICATIONS IN THESE RANGES REQUIRE THE ADDITION OF A HEAD FAN

^ C = 208-230/3/60, D = 460/3/60, E = 575/3/60

* K = 230/3/60

For 50 cycle capacity, multiply values by .86

A1 PERFORMANCE DATA – R-407C

Medium Temperature High Efficiency Models - Discus™ Compressors

Please consult AWEF table on page 70 to confirm DOE compliance per model

R-407C		Capacity BTUH @ 90°F Ambient by SST								
Model	Compressor	40°F	35°F	30°F	25°F	20°F	15°F	10°F	0°F	-10°F
BCV0151M^ACD	3DS3R17ME	182,010	166,200	150,930	136,370	122,600	109,580	97,410	75,640	57,120
BCV0201M^ACD	4DBNR20ME	236,030	213,510	192,510	172,760	153,750	136,050	118,820	85,340	51,480
BCV0251M^ACD	4DHNR22ME	259,010	235,340	212,800	191,460	171,270	152,290	134,760	104,440	79,980
BCV0301M^ACD	4DJNR28ME	320,910	288,610	259,060	231,790	206,610	183,730	162,800	126,070	94,390
BCV0351M^ACD	6DHNR35ME	381,820	343,050	307,410	275,240	246,260	220,150	196,180	152,390	109,290
BCV0401M*ACD	6DJNR40ME	507,630	445,630	391,710	345,750	306,280	272,420	242,720	189,090	130,880

R-407C		Capacity BTUH @ 95°F Ambient by SST								
Model	Compressor	40°F	35°F	30°F	25°F	20°F	15°F	10°F	0°F	-10°F
BCV0151M^ACD	**3DS3R17ME**	**176,090**	**160,890**	**146,200**	**132,110**	**118,750**	**106,120**	**94,180**	**72,580**	**53,920**
BCV0201M^ACD	**4DBNR20ME**	**227,270**	**205,450**	**184,850**	**165,720**	**147,690**	**130,520**	**114,020**	**81,970**	**49,690**
BCV0251M^ACD	**4DHNR22ME**	**247,090**	**224,920**	**203,860**	**183,870**	**164,380**	**146,520**	**129,870**	**100,480**	**76,220**
BCV0301M^ACD	**4DJNR28ME**	**306,310**	**276,220**	**248,270**	**222,690**	**198,990**	**177,300**	**157,370**	**121,900**	**90,440**
BCV0351M^ACD	**6DHNR35ME**	**367,200**	**330,470**	**296,540**	**265,890**	**238,090**	**212,970**	**189,710**	**146,780**	**103,720**
BCV0401M*ACD	**6DJNR40ME**	**482,360**	**423,710**	**371,670**	**328,520**	**291,210**	**259,590**	**231,890**	**182,120**	**127,830**

R-407C		Capacity BTUH @ 100°F Ambient by SST								
Model	Compressor	40°F	35°F	30°F	25°F	20°F	15°F	10°F	0°F	-10°F
BCV0151M^ACD	3DS3R17ME	170,240	155,620	141,450	127,800	114,810	102,410	90,750	69,290	-
BCV0201M^ACD	4DBNR20ME	218,400	197,320	177,520	158,940	141,650	125,210	109,410	78,830	48,160
BCV0251M^ACD	4DHNR22ME	235,300	214,990	195,180	176,290	157,980	140,930	125,030	96,570	72,510
BCV0301M^ACD	4DJNR28ME	292,200	264,090	237,920	213,970	191,670	171,170	152,140	117,890	86,560
BCV0351M^ACD	6DHNR35ME	352,760	317,730	285,220	256,100	229,590	205,440	182,920	140,820	97,870
BCV0401M*ACD	6DJNR40ME	455,090	398,790	351,000	310,140	275,580	246,310	220,910	175,870	126,460

R-407C		Capacity BTUH @ 110°F Ambient by SST								
Model	Compressor	40°F	35°F	30°F	25°F	20°F	15°F	10°F	0°F	-10°F
BCV0151M^ACD	3DS3R17ME	-	-	-	114,320	102,070	90,500	79,180	58,080	38,590
BCV0201M^ACD	4DBNR20ME	-	173,560	156,140	139,970	124,750	110,400	96,840	70,880	45,210
BCV0251M^ACD	4DHNR22ME	-	-	-	155,500	140,310	125,710	111,810	85,700	61,920
BCV0301M^ACD	4DJNR28ME	252,920	230,460	209,650	189,980	171,610	154,410	137,990	106,850	75,890
BCV0351M^ACD	6DHNR35ME	-	278,470	251,000	225,570	202,360	181,070	160,690	120,970	78,460
BCV0401M*ACD	6DJNR40ME	368,180	322,630	283,420	251,610	225,850	205,800	189,380	163,200	134,200

Notes:

LOW SUCTION TEMPERATURE APPLICATIONS IN THESE RANGES REQUIRE THE ADDITION OF A HEAD FAN

^ C = 208-230/3/60, D = 460/3/60, E = 575/3/60

* K = 230/3/60

For 50 cycle capacity, multiply values by .86

A1 PERFORMANCE DATA – R-404A/R-507A

Low Temperature Models - Discus™ Compressors

Please consult AWEF table on page 71 to confirm DOE compliance per model

R-404A/R-507A		Capacity BTUH @ 90°F Ambient by SST								
Model	Compressor	0°F	-5°F	-10°F	-15°F	-20°F	-25°F	-30°F	-35°F	-40°F
BCV0120L^ACD	4DBNF54KE	106,300	95,100	84,860	75,450	66,720	58,580	50,910	43,480	36,180
BCV0150L^ACD	4DHNF63KE	124,270	111,680	100,090	89,270	79,270	69,830	60,930	52,360	43,990
BCV0220L^ACD	4DJNF76KE	144,780	131,490	118,660	106,370	94,590	83,420	72,720	62,380	52,420
BCV0270L^ACD	6DHNF93KE	177,910	161,710	145,650	130,010	114,670	100,170	86,680	74,090	62,740
BCV0300L^ACD	6DJNF11ME	195,900	178,260	160,860	144,220	127,990	112,640	98,030	84,510	71,890
BCV0400L+ACD	6DUNF13ME	265,350	237,740	212,900	190,550	169,910	150,550	131,920	113,150	-

R-404A/R-507A		Capacity BTUH @ 95°F Ambient by SST								
Model	Compressor	0°F	-5°F	-10°F	-15°F	-20°F	-25°F	-30°F	-35°F	-40°F
BCV0120L^ACD	**4DBNF54KE**	**101,920**	**91,220**	**81,440**	**72,330**	**63,870**	**55,920**	**48,380**	**40,990**	**33,700**
BCV0150L^ACD	**4DHNF63KE**	**118,930**	**106,840**	**95,650**	**85,260**	**75,510**	**66,350**	**57,710**	**49,370**	**41,180**
BCV0220L^ACD	**4DJNF76KE**	**138,630**	**125,760**	**113,480**	**101,550**	**90,160**	**79,340**	**68,920**	**58,840**	**49,010**
BCV0270L^ACD	**6DHNF93KE**	**169,860**	**154,400**	**139,090**	**124,080**	**109,210**	**95,200**	**82,100**	**69,810**	**58,610**
BCV0300L^ACD	**6DJNF11ME**	**186,500**	**169,700**	**153,380**	**137,520**	**121,940**	**107,050**	**93,020**	**79,890**	**67,540**
BCV0400L+ACD	**6DUNF13ME**	**253,970**	**226,870**	**202,750**	**181,110**	**161,180**	**142,520**	**124,640**	**106,690**	**-**

R-404A/R-507A		Capacity BTUH @ 100°F Ambient by SST								
Model	Compressor	0°F	-5°F	-10°F	-15°F	-20°F	-25°F	-30°F	-35°F	-40°F
BCV0120L^ACD	4DBNF54KE	97,490	87,280	77,920	69,150	60,940	53,180	45,720	38,410	31,120
BCV0150L^ACD	4DHNF63KE	113,810	102,150	91,390	81,350	71,930	63,050	54,650	46,540	38,580
BCV0220L^ACD	4DJNF76KE	132,400	120,110	108,350	96,780	85,840	75,250	65,090	55,230	45,560
BCV0270L^ACD	6DHNF93KE	161,630	147,040	132,430	118,040	103,960	90,180	77,460	65,520	54,510
BCV0300L^ACD	6DJNF11ME	-	161,270	145,850	130,730	115,760	101,540	88,070	75,260	63,170
BCV0400L+ACD	6DUNF13ME	242,310	216,080	192,900	171,790	152,510	134,540	117,270	-	-

R-404A/R-507A		Capacity BTUH @ 110°F Ambient by SST								
Model	Compressor	0°F	-5°F	-10°F	-15°F	-20°F	-25°F	-30°F	-35°F	-40°F
BCV0120L^ACD	4DBNF54KE	88,330	79,190	70,600	62,470	54,750	47,300	40,070	32,880	25,690
BCV0150L^ACD	4DHNF63KE	103,700	93,140	83,330	74,020	65,260	56,980	49,090	41,430	33,910
BCV0220L^ACD	4DJNF76KE	-	-	-	87,410	77,100	67,080	57,300	47,780	38,420
BCV0270L^ACD	6DHNF93KE	-	-	-	-	-	80,180	68,200	56,760	46,260
BCV0300L^ACD	6DJNF11ME	-	-	-	-	-	90,520	78,080	65,910	54,380
BCV0400L+ACD	6DUNF13ME	219,320	194,970	173,380	153,630	135,640	-	-	-	-

Notes:
^ C = 208-230/3/60, D = 460/3/60, E = 575/3/60
+D = 460/3/60, E = 575/3/60
For 50 cycle capacity, multiply values by .86

A1 PERFORMANCE DATA – R-448A/R-449A

Low Temperature Models - Discus™ Compressors

Please consult AWEF table on page 71 to confirm DOE compliance per model

R-448A/R-449A		Capacity BTUH @ 90°F Ambient by SST								
Model	Compressor	0°F	-5°F	-10°F	-15°F	-20°F	-25°F	-30°F	-35°F	-40°F
BCV0120L^ACD	4DBNF54KE	99,210	87,570	76,690	66,450	57,000	48,370	40,600	33,730	27,770
BCV0150L^ACD	4DHNF63KE	112,790	100,320	88,580	77,550	67,400	58,090	49,790	42,490	36,250
BCV0220L^ACD	4DJNF76KE	140,060	123,030	107,930	94,170	81,880	70,520	59,890	49,500	39,160
BCV0270L^ACD	6DHNF93KE	162,520	143,510	125,720	109,300	94,300	80,570	68,190	56,650	45,960
BCV0300L^ACD	6DJNF11ME	195,370	172,770	151,880	132,310	114,160	97,680	82,500	68,200	54,720
BCV0400L+ACD	6DUNF13ME	235,380	209,470	184,570	160,770	138,260	117,710	99,140	-	-

R-448A/R-449A		Capacity BTUH @ 95°F Ambient by SST								
Model	Compressor	0°F	-5°F	-10°F	-15°F	-20°F	-25°F	-30°F	-35°F	-40°F
BCV0120L^ACD	**4DBNF54KE**	**95,220**	**83,940**	**73,400**	**63,450**	**54,230**	**45,810**	**38,190**	**31,430**	**25,590**
BCV0150L^ACD	**4DHNF63KE**	**108,290**	**96,300**	**84,950**	**74,300**	**64,410**	**55,370**	**47,300**	**40,150**	**34,080**
BCV0220L^ACD	**4DJNF76KE**	**134,610**	**117,920**	**103,200**	**89,820**	**77,800**	**66,660**	**56,210**	**45,960**	**35,760**
BCV0270L^ACD	**6DHNF93KE**	**155,740**	**137,340**	**120,030**	**103,960**	**89,380**	**76,070**	**63,830**	**52,480**	**41,860**
BCV0300L^ACD	**6DJNF11ME**	**186,740**	**164,900**	**144,820**	**125,760**	**108,250**	**91,850**	**77,000**	**62,930**	**49,600**
BCV0400L+ACD	**6DUNF13ME**	**227,690**	**202,460**	**177,960**	**154,430**	**132,330**	**111,770**	**-**	**-**	**-**

R-448A/R-449A		Capacity BTUH @ 100°F Ambient by SST								
Model	Compressor	0°F	-5°F	-10°F	-15°F	-20°F	-25°F	-30°F	-35°F	-40°F
BCV0120L^ACD	4DBNF54KE	91,100	80,250	69,960	60,290	51,320	43,060	35,640	29,000	23,250
BCV0150L^ACD	4DHNF63KE	103,790	92,200	81,290	70,940	61,350	52,570	44,730	37,770	31,830
BCV0220L^ACD	4DJNF76KE	129,120	112,880	98,500	85,410	73,660	62,730	52,460	42,370	32,290
BCV0270L^ACD	6DHNF93KE	148,660	130,680	114,100	98,640	84,200	71,220	59,200	47,980	37,420
BCV0300L^ACD	6DJNF11ME	-	156,890	137,410	118,860	101,630	85,890	71,200	57,330	44,010
BCV0400L+ACD	6DUNF13ME	220,130	195,180	171,100	147,890	126,050	105,560	-	-	-

R-448A/R-449A		Capacity BTUH @ 110°F Ambient by SST								
Model	Compressor	0°F	-5°F	-10°F	-15°F	-20°F	-25°F	-30°F	-35°F	-40°F
BCV0120L^ACD	4DBNF54KE	82,590	72,380	62,730	53,620	45,080	37,260	30,170	23,830	18,180
BCV0150L^ACD	4DHNF63KE	94,670	83,890	73,730	64,070	55,070	46,830	39,390	32,820	27,210
BCV0220L^ACD	4DJNF76KE	117,980	102,630	88,990	76,620	65,270	54,760	44,750	35,000	25,300
BCV0270L^ACD	6DHNF93KE	133,840	117,030	101,420	86,650	73,230	60,730	49,100	38,100	-
BCV0300L^ACD	6DJNF11ME	-	-	-	-	87,720	72,830	58,690	45,060	-
BCV0400L+ACD	6DUNF13ME	203,950	180,110	156,750	133,910	112,500	92,330	-	-	-

Notes:
^ C = 208-230/3/60, D = 460/3/60, E = 575/3/60
+D = 460/3/60, E = 575/3/60
For 50 cycle capacity, multiply values by .86

A1 PERFORMANCE DATA – R-407A/R-407F

Low Temperature Models - Discus™ Compressors

Please consult AWEF table on page 71 to confirm DOE compliance per model

R-407A/R-407F		Capacity BTUH @ 90°F Ambient by SST								
Model	Compressor	0°F	-5°F	-10°F	-15°F	-20°F	-25°F	-30°F	-35°F	-40°F
BCV0120L^ACD	4DBNF54KE	101,740	90,080	78,970	68,490	58,660	49,560	41,230	33,590	26,770
BCV0150L^ACD	4DHNF63KE	115,400	102,880	91,040	79,770	69,270	59,420	50,380	42,080	34,600
BCV0220L^ACD	4DJNF76KE	144,100	126,890	111,030	96,340	83,100	71,520	61,430	52,920	46,080
BCV0270L^ACD	6DHNF93KE	164,120	145,580	128,030	111,570	96,390	82,130	68,840	56,020	43,590
BCV0300L^ACD	6DJNF11ME	197,390	175,220	154,470	135,120	116,850	99,500	83,380	67,870	52,770
BCV0400L+ACD	6DUNF13ME	244,190	217,780	192,210	167,250	143,630	121,580	-	-	-

R-407A/R-407F		Capacity BTUH @ 95°F Ambient by SST								
Model	Compressor	0°F	-5°F	-10°F	-15°F	-20°F	-25°F	-30°F	-35°F	-40°F
BCV0120L^ACD	**4DBNF54KE**	**97,420**	**86,010**	**75,370**	**65,210**	**55,680**	**46,840**	**38,690**	**31,270**	**24,600**
BCV0150L^ACD	**4DHNF63KE**	**110,530**	**98,460**	**87,030**	**76,190**	**66,040**	**56,530**	**47,740**	**39,680**	**32,370**
BCV0220L^ACD	**4DJNF76KE**	**137,900**	**121,200**	**105,750**	**91,590**	**79,020**	**67,870**	**58,310**	**50,340**	**44,080**
BCV0270L^ACD	**6DHNF93KE**	**156,820**	**138,710**	**121,940**	**106,140**	**91,170**	**77,380**	**64,310**	**51,760**	**39,490**
BCV0300L^ACD	**6DJNF11ME**	**188,340**	**166,940**	**146,880**	**128,130**	**110,350**	**93,360**	**77,760**	**62,570**	**47,680**
BCV0400L+ACD	**6DUNF13ME**	**235,920**	**210,100**	**184,900**	**160,460**	**137,190**	**115,380**	**-**	**-**	**-**

R-407A/R-407F		Capacity BTUH @ 100°F Ambient by SST								
Model	Compressor	0°F	-5°F	-10°F	-15°F	-20°F	-25°F	-30°F	-35°F	-40°F
BCV0120L^ACD	4DBNF54KE	92,820	81,920	71,650	61,820	52,580	43,990	36,050	28,810	22,320
BCV0150L^ACD	4DHNF63KE	105,520	93,950	83,000	72,620	62,760	53,530	45,030	37,210	30,080
BCV0220L^ACD	4DJNF76KE	131,580	115,390	100,390	86,820	74,770	64,120	55,090	47,670	41,960
BCV0270L^ACD	6DHNF93KE	149,300	131,820	115,610	100,200	85,660	72,270	59,520	47,230	35,160
BCV0300L^ACD	6DJNF11ME	-	158,290	138,990	120,820	103,290	87,020	71,840	56,960	42,330
BCV0400L+ACD	6DUNF13ME	227,420	202,090	177,540	153,420	130,580	108,970	-	-	-

R-407A/R-407F		Capacity BTUH @ 110°F Ambient by SST								
Model	Compressor	0°F	-5°F	-10°F	-15°F	-20°F	-25°F	-30°F	-35°F	-40°F
BCV0120L^ACD	4DBNF54KE	83,500	73,490	63,850	54,670	46,010	37,870	30,410	23,580	17,380
BCV0150L^ACD	4DHNF63KE	95,560	84,970	74,910	65,200	56,030	47,420	39,440	32,040	25,330
BCV0220L^ACD	4DJNF76KE	118,630	103,500	89,580	77,130	65,990	56,360	48,370	42,000	37,330
BCV0270L^ACD	6DHNF93KE	133,640	117,400	102,180	87,590	74,160	61,340	49,030	37,230	25,680
BCV0300L^ACD	6DJNF11ME	-	-	-	-	88,860	73,670	59,040	44,620	30,680
BCV0400L+ACD	6DUNF13ME	209,870	185,400	161,630	138,370	116,130	94,920	-	-	-

Notes:

DEMAND COOLING IS REQUIRED FOR ALL APPLICATIONS

^ C = 208-230/3/60, D = 460/3/60, E = 575/3/60

+D = 460/3/60, E = 575/3/60

For 50 cycle capacity, multiply values by .86

A1 PERFORMANCE DATA – R-407C

Low Temperature Models - Discus™ Compressors

Please consult AWEF table on page 71 to confirm DOE compliance per model

R-407C		Capacity BTUH @ 90°F Ambient by SST								
Model	Compressor	0°F	-5°F	-10°F	-15°F	-20°F	-25°F	-30°F	-35°F	-40°F
BCV0120L^ACD	4DBNF54KE	87,960	76,620	66,280	56,800	48,240	40,560	33,610	27,390	21,780
BCV0150L^ACD	4DHNF63KE	100,100	87,800	76,580	66,350	57,050	48,680	41,180	34,350	28,110
BCV0220L^ACD	4DJNF76KE	116,440	101,460	88,320	76,810	66,620	57,530	49,230	41,400	33,750
BCV0270L^ACD	6DHNF93KE	143,780	127,240	111,070	95,550	81,070	67,660	55,440	44,860	35,770
BCV0300L^ACD	6DJNF11ME	168,840	149,230	130,530	112,590	95,690	80,360	66,370	53,970	43,410
BCV0400L+ACD	6DUNF13ME	214,200	191,140	168,430	146,240	125,210	-	-	-	-

R-407C		Capacity BTUH @ 95°F Ambient by SST								
Model	Compressor	0°F	-5°F	-10°F	-15°F	-20°F	-25°F	-30°F	-35°F	-40°F
BCV0120L^ACD	**4DBNF54KE**	**84,600**	**73,530**	**63,440**	**54,160**	**45,790**	**38,270**	**31,460**	**25,370**	**19,830**
BCV0150L^ACD	**4DHNF63KE**	**96,300**	**84,330**	**73,400**	**63,430**	**54,350**	**46,190**	**38,880**	**32,180**	**26,130**
BCV0220L^ACD	**4DJNF76KE**	**112,470**	**97,900**	**85,230**	**74,010**	**64,090**	**55,190**	**47,090**	**39,390**	**31,850**
BCV0270L^ACD	**6DHNF93KE**	**138,380**	**122,260**	**106,300**	**91,140**	**76,910**	**63,560**	**51,620**	**40,920**	**31,840**
BCV0300L^ACD	**6DJNF11ME**	**162,240**	**143,320**	**124,870**	**107,310**	**90,720**	**75,720**	**61,900**	**49,730**	**39,060**
BCV0400L+ACD	**6DUNF13ME**	**207,480**	**185,140**	**162,860**	**141,180**	**120,380**	**-**	**-**	**-**	**-**

R-407C		Capacity BTUH @ 100°F Ambient by SST								
Model	Compressor	0°F	-5°F	-10°F	-15°F	-20°F	-25°F	-30°F	-35°F	-40°F
BCV0120L^ACD	4DBNF54KE	81,110	70,320	60,410	51,390	43,240	35,870	29,180	23,180	17,780
BCV0150L^ACD	4DHNF63KE	92,400	80,770	70,120	60,360	51,550	43,590	36,470	29,930	24,020
BCV0220L^ACD	4DJNF76KE	108,210	94,140	81,900	71,030	61,400	52,700	44,780	37,250	29,750
BCV0270L^ACD	6DHNF93KE	132,930	117,150	101,560	86,580	72,620	59,390	47,600	36,970	27,810
BCV0300L^ACD	6DJNF11ME	155,540	136,890	119,080	101,830	85,790	70,940	57,270	45,260	34,710
BCV0400L+ACD	6DUNF13ME	200,800	179,050	157,330	135,940	115,380	-	-	-	-

R-407C		Capacity BTUH @ 110°F Ambient by SST								
Model	Compressor	0°F	-5°F	-10°F	-15°F	-20°F	-25°F	-30°F	-35°F	-40°F
BCV0120L^ACD	4DBNF54KE	73,680	63,370	53,990	45,390	37,670	30,570	24,210	18,470	13,240
BCV0150L^ACD	4DHNF63KE	84,390	73,320	63,240	53,980	45,620	38,120	31,300	25,090	19,420
BCV0220L^ACD	4DJNF76KE	98,720	85,680	74,350	64,190	55,050	46,830	39,300	32,020	24,750
BCV0270L^ACD	6DHNF93KE	121,860	106,780	91,790	77,460	63,620	50,890	39,160	28,580	19,400
BCV0300L^ACD	6DJNF11ME	-	-	-	-	75,420	60,820	47,770	35,850	25,270
BCV0400L+ACD	6DUNF13ME	188,010	167,150	146,000	124,850	-	-	-	-	-

Notes:

DEMAND COOLING IS REQUIRED FOR ALL APPLICATIONS

^ C = 208-230/3/60, D = 460/3/60, E = 575/3/60

+D = 460/3/60, E = 575/3/60

For 50 cycle capacity, multiply values by .86

A2L UNIT SPECIFICATIONS

Medium & Low Temperature Models - Copeland Discus™ Compressors

Please consult AWEF table on pages 70-71 to confirm DOE compliance per model

Model	Compressor	Refrigerant Line Connections (OD)		Rec. Capacity @90% full (lbs)	Condenser Fan Data		Dimensions (In.)			Net Wt.
		Liquid	Suction		No. Fans	Dia.	Length	Width	Height	(lbs.)
BCV0150M^ACE	3YS3R16ME	1-1/8	1-5/8	123	2	30"	170.7	48.9	53.9	1960
BCV0200M^ACE	4YBNR19ME	1-1/8	2-1/8	123	2	30"	170.7	48.9	53.9	2120
BCV0250M^ACE	4YHNR22ME	1-1/8	2-1/8	123	2	30"	170.7	48.9	53.9	2120
BCV0260M^ACE	4YHNR22ME	1-1/8	2-1/8	123	2	30"	170.7	48.9	53.9	2140
BCV0300M^ACE	4YJNR27ME	1-1/8	2-1/8	188	2	30"	170.7	48.9	53.9	2160
BCV0350M^ACE	6YHNR32ME	1-1/8	2-1/8	188	3	30"	225.7	48.9	53.9	2720
BCV0400M*ACE	6YJNR39ME	1-1/8	2-1/8	188	3	30"	225.7	48.9	53.9	2680
BCV0500M^ACE	6YUNR48ME	1-1/8	2-1/8	188	4	30"	280.1	48.9	55.9	3150
BCV0120L^ACE	4YBNF40KE	1-1/8	2-1/8	123	2	30"	170.7	48.9	53.9	2050
BCV0150L^ACE	4YHNF46KE	1-1/8	2-1/8	123	2	30"	170.7	48.9	53.9	2100
BCV0220L^ACE	4YJNF59KE	1-1/8	2-1/8	123	2	30"	170.7	48.9	53.9	2050
BCV0270L^ACE	6YHNF68KE	1-1/8	2-1/8	123	2	30"	170.7	48.9	53.9	2190
BCV0300L^ACE	6YJNF84KE	1-1/8	2-1/8	123	2	30"	170.7	48.9	53.9	2150
BCV0400L+ACE	66YUNF10ME	1-1/8	2-1/8	188	3	30"	225.7	48.9	53.9	2700

A2L UNIT SPECIFICATIONS

High Efficiency Temperature Models - Discus™ Compressors

Please consult AWEF table on pages 69-70 to confirm DOE compliance per model

Model	Compressor	Refrigerant Line Connections (OD)		Rec. Capacity @90% full (lbs)	Condenser Fan Data		Dimensions (In.)			Net Wt.
		Liquid	Suction		No. Fans	Dia.	Length	Width	Height	(lbs.)
BCV0151M^ACE	3YS3R16ME	7/8	1-5/8	123	2	30"	170.7	48.9	53.9	1960
BCV0201M^ACE	4YBNR19ME	7/8	2-1/8	123	2	30"	170.7	48.9	53.9	2080
BCV0251M^ACE	4YHNR22ME	1-1/8	2-1/8	188	3	30"	225.7	48.9	53.9	2510
BCV0301M^ACE	4YJNR27ME	1-1/8	2-1/8	188	3	30"	225.7	48.9	53.9	2530
BCV0351M^ACE	6YHNR32ME	1-1/8	2-1/8	188	4	30"	280.1	48.9	55.9	3030
BCV0401M*ACE	6YJNR39ME	1-1/8	2-1/8	188	4	30"	280.1	48.9	55.9	3040

Notes:
^ C = 208-230/3/60, D = 460/3/60, E = 575/3/60
* K = 230/3/60, D = 460/3/60, E = 575/3/60
+ D = 460/3/60, E = 575/3/60

A1 UNIT SPECIFICATIONS

Medium & Low Temperature Models - Discus™ Compressors

Please consult AWEF table on pages 70-71 to confirm DOE compliance per model

Model	Compressor	Refrigerant Line Connections (OD)		Rec. Capacity @90% full (lbs)	Condenser Fan Data		Dimensions (In.)			Net Wt.
		Liquid	Suction		No. Fans	Dia.	Length	Width	Height	(lbs.)
BCV0150M^ACD	3DS3R17ME	1-1/8	1-5/8	123	2	30"	170.7	48.9	53.9	1,910
BCV0200M^ACD	4DBNR20ME	1-1/8	2-1/8	123	2	30"	170.7	48.9	53.9	2,070
BCV0250M^ACD	4DHNR22ME	1-1/8	2-1/8	123	2	30"	170.7	48.9	53.9	2,070
BCV0260M^ACD	4DHNR22ME	1-1/8	2-1/8	123	2	30"	170.7	48.9	53.9	2,070
BCV0300M^ACD	4DJNR28ME	1-1/8	2-1/8	188	2	30"	170.7	48.9	53.9	2,070
BCV0350M^ACD	6DHNR35ME	1-1/8	2-1/8	188	3	30"	225.7	48.9	53.9	2,580
BCV0400M*ACD	6DJNR40ME	1-1/8	2-1/8	188	3	30"	225.7	48.9	53.9	2,590
BCV0500MDACD	6DUNR49ME	1-1/8	2-1/8	188	4	30"	280.1	48.9	55.9	3,050
BCV0120L^ACD	4DBNF54KE	1-1/8	2-1/8	123	2	30"	170.7	48.9	53.9	2,000
BCV0150L^ACD	4DHNF63KE	1-1/8	2-1/8	123	2	30"	170.7	48.9	53.9	2,050
BCV0220L^ACD	4DJNF76KE	1-1/8	2-1/8	123	2	30"	170.7	48.9	53.9	2,000
BCV0270L^ACD	6DHNF93KE	1-1/8	2-1/8	123	2	30"	170.7	48.9	53.9	2,100
BCV0300L^ACD	6DJNF11ME	1-1/8	2-1/8	123	2	30"	170.7	48.9	53.9	2,100
BCV0400LDACD	6DUNF13ME	1-1/8	2-1/8	188	3	30"	225.7	48.9	53.9	2,600

A1 UNIT SPECIFICATIONS

Medium & Low Temperature Models - Discus™ Compressors -575/3/60V

Please consult AWEF table on pages 70-71 to confirm DOE compliance per model

Model	Compressor	Refrigerant Line Connections (OD)		Rec. Capacity @90% full (lbs)	Condenser Fan Data		Dimensions (In.)			Net Wt.
		Liquid	Suction		No. Fans	Dia.	Length	Width	Height	(lbs.)
BCV0150MEACD	3DS3R17ME	1-1/8	1-5/8	123	2	30"	170.7	48.9	53.9	2,070
BCV0200MEACD	4DBNR20ME	1-1/8	2-1/8	123	2	30"	170.7	48.9	53.9	2,070
BCV0250MEACD	4DHNR22ME	1-1/8	2-1/8	123	2	30"	170.7	48.9	53.9	2,070
BCV0260MEACD	4DHNR22ME	1-1/8	2-1/8	123	2	30"	170.7	48.9	53.9	2,230
BCV0300MEACD	4DJNR28ME	1-1/8	2-1/8	188	2	30"	170.7	48.9	53.9	2,070
BCV0350MEACD	6DHNR35ME	1-1/8	2-1/8	188	3	30"	225.7	48.9	53.9	2,780
BCV0400MEACD	6DJNR40ME	1-1/8	2-1/8	188	3	30"	225.7	48.9	53.9	2,800
BCV0500MEACD	6DUNR49ME	1-1/8	2-1/8	188	4	30"	280.1	48.9	55.9	3,250
BCV0120LEACD	4DBNF54KE	1-1/8	2-1/8	123	2	30"	170.7	48.9	53.9	2,160
BCV0150LEACD	4DHNF63KE	1-1/8	2-1/8	123	2	30"	170.7	48.9	53.9	2,200
BCV0220LEACD	4DJNF76KE	1-1/8	2-1/8	123	2	30"	170.7	48.9	53.9	2,160
BCV0270LEACD	6DHNF93KE	1-1/8	2-1/8	123	2	30"	170.7	48.9	53.9	2,260
BCV0300LEACD	6DJNF11ME	1-1/8	2-1/8	123	2	30"	170.7	48.9	53.9	2,300
BCV0400LEACD	6DUNF13ME	1-1/8	2-1/8	188	3	30"	225.7	48.9	53.9	2,800

Notes:
^ C = 208-230/3/60, D = 460/3/60, E = 575/3/60
* K = 230/3/60, D = 460/3/60

A1 UNIT SPECIFICATIONS

High Efficiency Temperature Models - Discus™ Compressors

Please consult AWEF table on pages 70-71 to confirm DOE compliance per model

Model	Compressor	Refrigerant Line Connections (OD)		Rec. Capacity @90% full (lbs)	Condenser Fan Data		Dimensions (In.)			Net Wt.
		Liquid	Suction		No. Fans	Dia.	Length	Width	Height	(lbs.)
BCV0151M^ACD	3DS3R17ME	7/8	1-5/8	123	2	30"	170.7	48.9	53.9	1,910
BCV0201M^ACD	4DBNR20ME	7/8	2-1/8	123	2	30"	170.7	48.9	53.9	2,030
BCV0251M^ACD	4DHNR22ME	1-1/8	2-1/8	188	3	30"	225.7	48.9	53.9	2,460
BCV0301M^ACD	4DJNR28ME	1-1/8	2-1/8	188	3	30"	225.7	48.9	53.9	2,460
BCV0351M^ACD	6DHNR35ME	1-1/8	2-1/8	188	4	30"	280.1	48.9	55.9	2,980
BCV0401M*ACD	6DJNR40ME	1-1/8	2-1/8	188	4	30"	280.1	48.9	55.9	2,990

A1 UNIT SPECIFICATIONS

High Efficiency Temperature Models - Discus™ Compressors - 575/3/60V

Please consult AWEF table on pages 70-71 to confirm DOE compliance per model

Model	Compressor	Refrigerant Line Connections (OD)		Rec. Capacity @90% full (lbs)	Condenser Fan Data		Dimensions (In.)			Net Wt.
		Liquid	Suction		No. Fans	Dia.	Length	Width	Height	(lbs.)
BCV0151MEACD	3DS3R17ME	7/8	1-5/8	123	2	30"	170.7	48.9	53.9	2,070
BCV0201MEACD	4DBNR20ME	7/8	2-1/8	123	2	30"	170.7	48.9	53.9	2,030
BCV0251MEACD	4DHNR22ME	1-1/8	2-1/8	188	3	30"	225.7	48.9	53.9	2,670
BCV0301MEACD	4DJNR28ME	1-1/8	2-1/8	188	3	30"	225.7	48.9	53.9	2,460
BCV0351MEACD	6DHNR35ME	1-1/8	2-1/8	188	4	30"	280.1	48.9	55.9	2,980
BCV0401MEACD	6DJNR40ME	1-1/8	2-1/8	188	4	30"	280.1	48.9	55.9	2,990

Notes:
^ C = 208-230/3/60, D = 460/3/60, E = 575/3/60
K = 230/3/60, D = 460/3/60

A2L ELECTRICAL DATA

Medium Temperature Models - Copeland Discus™ Compressors/208-230V

Please consult AWEF table on page 70 to confirm DOE compliance per model

Model	Compressor	Compressor		Condenser		Air Defrost		Remote Loads: Four Contactors							
								Low Amps "4L"				High Amps "4H"			
		RLA	LRA	No. Fans	FLA (Total)	MCA	MOPD	Evap. Fan Amps	Defrost Htrs. Amps	Electric Defrost MCA	Electric Defrost MOPD	Evap. Fan Amps	Defrost Htrs. Amps	Electric Defrost MCA	Electric Defrost MOPD
BCV0150MCACE	3YS3R16ME	53.5	275.0	2.0	7.0	73.9	125.0	25	96	120.0	150	25	108	135.0	150
BCV0200MCACE	4YBNR19ME	64.7	374.0	2.0	7.0	87.9	150.0	25	96	120.0	175	25	108	135.0	175
BCV0250MCACE	4YHNR22ME	66.8	428.0	2.0	13.2	96.7	150.0	25	125	156.3	175	30	181	226.3	250
BCV0260MCACE	4YHNR22ME	66.8	428.0	2.0	13.2	96.7	150.0	25	125	156.3	175	30	181	226.3	250
BCV0300MCACE	4YJNR27ME	94.6	470.0	2.0	13.2	131.5	225.0	30	149	186.3	250	30	181	226.3	250
BCV0350MCACE	6YHNR32ME	112.3	565.0	3.0	10.5	150.9	250.0	35	160	200.0	250	35	192	240.0	250
BCV0400MCACE	6YJNR39ME	128.2	594.0	3.0	19.8	180.1	300.0	35	160	215.1	300	35	192	240.0	300

Model	Compressor	Compressor		Condenser		Air Defrost		Remote Loads: Three Contactors							
								Low Amps "3L"				High Amps "3H"			
		RLA	LRA	No. Fans	FLA (Total)	MCA	MOPD	Evap. Fan Amps	Defrost Htrs. Amps	Electric Defrost MCA	Electric Defrost MOPD	Evap. Fan Amps	Defrost Htrs. Amps	Electric Defrost MCA	Electric Defrost MOPD
BCV0150MCACE	3YS3R16ME	53.5	275.0	2.0	7.0	73.9	125.0	25	96	120.0	150	25	96	120.0	150
BCV0200MCACE	4YBNR19ME	64.7	374.0	2.0	7.0	87.9	150.0	22	96	120.0	150	25	96	120.0	175
BCV0250MCACE	4YHNR22ME	66.8	428.0	2.0	13.2	96.7	150.0	20	96	120.0	175	25	120	150.0	175
BCV0260MCACE	4YHNR22ME	66.8	428.0	2.0	13.2	96.7	150.0	20	96	120.0	175	25	96	121.7	175
BCV0300MCACE	4YJNR27ME	94.6	470.0	2.0	13.2	131.5	225.0	25	125	156.5	250	20	125	156.3	225
BCV0350MCACE	6YHNR32ME	112.3	565.0	3.0	10.5	150.9	250.0	30	130	180.9	250	35	144	185.9	250
BCV0400MCACE	6YJNR39ME	128.2	594.0	3.0	19.8	180.1	300.0	30	130	210.1	300	30	144	210.1	300

Notes:
MCA = Minimum Circuit Ampacity
MOP = Maximum Overcurrent Protection

intelliGen™and Air Defrost Units do not carry any of the evaporator fan or heater loads.
Power is supplied directly to the evaporators and does not go through the condensing unit.
An evaporator heater hold out relay (option) is recommended when two or more evaporators are connected to a single (ACV) condensing unit to allow termination on coils that have already defrosted to prevent unnecessary steaming. This option is not needed on intelliGen™ systems wired for a Master / Slave operation.

Mounted Electric Defrost Kits for BLV condensing units include:
Defrost timer, spring terminal, (1) evaporator fan contactor and:
One (1) defrost heater contactor for 1L and 1H codes
Two (2) defrost heater contactors for 2L and 2H codes
Four (4) defrost heater contactors for 4L and 4H codes
Power is supplied to each intelliGen™ evaporator. volt electrical specification.
Each coil terminates its own defrost. Refrigeration will not start until all coils have terminated defrost.

A2L ELECTRICAL DATA

Medium Temperature Models - Copeland Discus™ Compressors/208-230V

Please consult AWEF table on page 70 to confirm DOE compliance per model

Model	Compressor	Compressor		Condenser		Air Defrost		Remote Loads: Two Contactors							
								Low Amps "2L"				High Amps "2H"			
		RLA	LRA	No. Fans	FLA (Total)	MCA	MOPD	Evap. Fan Amps	Defrost Htrs. Amps	Electric Defrost MCA	Electric Defrost MOPD	Evap. Fan Amps	Defrost Htrs. Amps	Electric Defrost MCA	Electric Defrost MOPD
BCV0150MCACE	3YS3R16ME	53.5	275.0	2.0	7.0	73.9	125.0	25	80	100.0	150	25	96	120.0	150
BCV0200MCACE	4YBNR19ME	64.7	374.0	2.0	7.0	87.9	150.0	20	80	107.9	150	20	96	120.0	150
BCV0250MCACE	4YHNR22ME	66.8	428.0	2.0	13.2	96.7	150.0	—	—	—	—	—	—	—	—
BCV0260MCACE	4YHNR22ME	66.8	428.0	2.0	13.2	96.7	150.0	—	—	—	—	—	—	—	—
BCV0300MCACE	4YJNR27ME	94.6	470.0	2.0	13.2	131.5	225.0	—	—	—	—	—	—	—	—
BCV0350MCACE	6YHNR32ME	112.3	565.0	3.0	10.5	150.9	250.0	—	—	—	—	—	—	—	—
BCV0400MCACE	6YJNR39ME	128.2	594.0	3.0	19.8	180.1	300.0	—	—	—	—	—	—	—	—

Notes:
MCA = Minimum Circuit Ampacity
MOP = Maximum Overcurrent Protection

intelliGen™ and Air Defrost Units do not carry any of the evaporator fan or heater loads.
Power is supplied directly to the evaporators and does not go through the condensing unit.
An evaporator heater hold out relay (option) is recommended when two or more evaporators are connected to a single (ACV) condensing unit to allow termination on coils that have already defrosted to prevent unnecessary steaming. This option is not needed on intelliGen™ systems wired for a Master / Slave operation.

Mounted Electric Defrost Kits for BLV condensing units include:
Defrost timer, spring terminal, (1) evaporator fan contactor and:
One (1) defrost heater contactor for 1L and 1H codes
Two (2) defrost heater contactors for 2L and 2H codes
Four (4) defrost heater contactors for 4L and 4H codes
Power is supplied to each intelliGen™ evaporator. volt electrical specification.
Each coil terminates its own defrost. Refrigeration will not start until all coils have terminated defrost.

A2L ELECTRICAL DATA

Medium Temperature Models - Copeland Discus™ Compressor/460V

Please consult AWEF table on page 70 to confirm DOE compliance per model

Model	Compressor	Compressor		Condenser		Air Defrost		Remote Loads: Four Contactors							
								Low Amps "4L"				High Amps "4H"			
								Evap. Fan Amps	Defrost Htrs. Amps	Electric Defrost		Evap. Fan Amps	Defrost Htrs. Amps	Electric Defrost	
		RLA	LRA	No. Fans	FLA (Total)	MCA	MOPD			MCA	MOPD			MCA	MOPD
BCV0150MDACE	3YS3R16ME	26.0	138.0	2.0	3.4	35.9	60.0	15	48	60.0	70	15	64	80.0	80
BCV0200MDACE	4YBNR19ME	32.4	187.0	2.0	3.4	43.9	70.0	15	48	60.0	90	15	64	80.0	90
BCV0250MDACE	4YHNR22ME	33.4	214.0	2.0	6.6	48.4	80.0	20	64	80.0	100	20	96	120.0	125
BCV0260MDACE	4YHNR22ME	33.4	214.0	2.0	6.6	48.4	80.0	20	64	80.0	100	20	96	120.0	125
BCV0300MDACE	4YJNR27ME	47.3	235.0	2.0	6.6	65.7	110.0	20	64	85.7	125	20	96	120.0	125
BCV0350MDACE	6YHNR32ME	56.2	283.0	3.0	5.1	75.3	125.0	20	64	95.4	150	20	96	120.0	150
BCV0400MDACE	6YJNR39ME	64.1	297.0	3.0	9.9	90.0	150.0	20	64	110.0	150	20	96	120.0	150
BCV0500MDACE	6YUNR48ME	75.0	482.0	4.0	6.8	100.5	175.0	20	64	120.6	175	20	96	120.6	175

Model	Compressor	Compressor		Condenser		Air Defrost		Remote Loads: Three Contactors							
								Low Amps "3L"				High Amps "3H"			
								Evap. Fan Amps	Defrost Htrs. Amps	Electric Defrost		Evap. Fan Amps	Defrost Htrs. Amps	Electric Defrost	
		RLA	LRA	No. Fans	FLA (Total)	MCA	MOPD			MCA	MOPD			MCA	MOPD
BCV0150MDACE	3YS3R16ME	26.0	138.0	2.0	3.4	35.9	60.0	15	48	60.0	70	15	64	80.0	80
BCV0200MDACE	4YBNR19ME	32.4	187.0	2.0	3.4	43.9	70.0	15	64	80.0	90	15	64	80.0	90
BCV0250MDACE	4YHNR22ME	33.4	214.0	2.0	6.6	48.4	80.0	15	64	80.0	90	20	64	80.0	100
BCV0260MDACE	4YHNR22ME	33.4	214.0	2.0	6.6	48.4	80.0	15	64	80.0	90	20	64	80.0	100
BCV0300MDACE	4YJNR27ME	47.3	235.0	2.0	6.6	65.7	110.0	20	64	85.7	125	20	64	85.7	125
BCV0350MDACE	6YHNR32ME	56.2	283.0	3.0	5.1	75.3	125.0	20	64	95.4	150	20	96	120.0	150
BCV0400MDACE	6YJNR39ME	64.1	297.0	3.0	9.9	90.0	150.0	20	64	110.0	150	22	64	112.0	175
BCV0500MDACE	6YUNR48ME	75.0	482.0	4.0	6.8	100.5	175.0	20	64	120.6	175	22	64	122.6	175

Notes:

MCA = Minimum Circuit Ampacity
MOP = Maximum Overcurrent Protection

intelliGen™and Air Defrost Units do not carry any of the evaporator fan or heater loads.
Power is supplied directly to the evaporators and does not go through the condensing unit.
An evaporator heater hold out relay (option) is recommended when two or more evaporators are connected to a single (ACV) condensing unit to allow termination on coils that have already defrosted to prevent unnecessary steaming. This option is not needed on intelliGen™ systems wired for a Master / Slave operation.

Mounted Electric Defrost Kits for BLV condensing units include:
Defrost timer, spring terminal, (1) evaporator fan contactor and:
One (1) defrost heater contactor for 1L and 1H codes
Two (2) defrost heater contactors for 2L and 2H codes
Four (4) defrost heater contactors for 4L and 4H codes
Power is supplied to each intelliGen™ evaporator. volt electrical specification.
Each coil terminates its own defrost. Refrigeration will not start until all coils have terminated defrost.

A2L ELECTRICAL DATA

Medium Temperature Models - Copeland Discus™ Compressor/460V (cont.)

Please consult AWEF table on page 70 to confirm DOE compliance per model

Model	Compressor	Compressor		Condenser		Air Defrost		Remote Loads: Two Contactors							
								Low Amps "2L"				High Amps "2H"			
		RLA	LRA	No. Fans	FLA (Total)	MCA	MOPD	Evap. Fan Amps	Defrost Htrs. Amps	Electric Defrost MCA	Electric Defrost MOPD	Evap. Fan Amps	Defrost Htrs. Amps	Electric Defrost MCA	Electric Defrost MOPD
BCV0150MDACE	3YS3R16ME	26.0	138.0	2.0	3.4	35.9	60.0	15	48	60.0	70	15	64	80.0	80
BCV0200MDACE	4YBNR19ME	32.4	187.0	2.0	3.4	43.9	70.0	15	48	60.0	90	15	64	80.0	90
BCV0250MDACE	4YHNR22ME	33.4	214.0	2.0	6.6	48.4	80.0	15	48	63.4	90	15	80	100.0	100
BCV0260MDACE	4YHNR22ME	33.4	214.0	2.0	6.6	48.4	80.0	15	48	63.4	90	15	80	100.0	100
BCV0300MDACE	4YJNR27ME	47.3	235.0	2.0	6.6	65.7	110.0	15	80	100.0	125	20	96	120.0	125
BCV0350MDACE	6YHNR32ME	56.2	283.0	3.0	5.1	75.3	125.0	20	80	100.0	150	20	96	120.0	150
BCV0400MDACE	6YJNR39ME	64.1	297.0	3.0	9.9	90.0	150.0	20	80	110.0	150	20	96	120.0	150
BCV0500MDACE	6YUNR48ME	75.0	482.0	4.0	6.8	100.5	175.0	20	80	120.6	175	20	96	120.6	175

Model	Compressor	Compressor		Condenser		Air Defrost		Remote Loads: One Contactor							
								Low Amps "1L"				High Amps "1H"			
		RLA	LRA	No. Fans	FLA (Total)	MCA	MOPD	Evap. Fan Amps	Defrost Htrs. Amps	Electric Defrost MCA	Electric Defrost MOPD	Evap. Fan Amps	Defrost Htrs. Amps	Electric Defrost MCA	Electric Defrost MOPD
BCV0150MDACE	3YS3R16ME	26.0	138.0	2.0	3.4	35.9	60.0	15	40	50.9	70	15	48	60.0	70
BCV0200MDACE	4YBNR19ME	32.4	187.0	2.0	3.4	43.9	70.0	15	40	58.9	90	15	48	60.0	90
BCV0250MDACE	4YHNR22ME	33.4	214.0	2.0	6.6	48.4	80.0	—	—	—	—	—	—	—	—
BCV0260MDACE	4YHNR22ME	33.4	214.0	2.0	6.6	48.4	80.0	—	—	—	—	—	—	—	—
BCV0300MDACE	4YJNR27ME	47.3	235.0	2.0	6.6	65.7	110.0	—	—	—	—	—	—	—	—
BCV0350MDACE	6YHNR32ME	56.2	283.0	3.0	5.1	75.3	125.0	—	—	—	—	—	—	—	—
BCV0400MDACE	6YJNR39ME	64.1	297.0	3.0	9.9	90.0	150.0	—	—	—	—	—	—	—	—
BCV0500MDACE	6YUNR48ME	75.0	482.0	4.0	6.8	100.5	175.0	—	—	—	—	—	—	—	—

Notes:
MCA = Minimum Circuit Ampacity
MOP = Maximum Overcurrent Protection

intelliGen™and Air Defrost Units do not carry any of the evaporator fan or heater loads.
Power is supplied directly to the evaporators and does not go through the condensing unit.
An evaporator heater hold out relay (option) is recommended when two or more evaporators are connected to a single (ACV) condensing unit to allow termination on coils that have already defrosted to prevent unnecessary steaming. This option is not needed on intelliGen™ systems wired for a Master / Slave operation.

Mounted Electric Defrost Kits for BLV condensing units include:
Defrost timer, spring terminal, (1) evaporator fan contactor and:
One (1) defrost heater contactor for 1L and 1H codes
Two (2) defrost heater contactors for 2L and 2H codes
Four (4) defrost heater contactors for 4L and 4H codes
Power is supplied to each intelliGen™ evaporator. volt electrical specification.
Each coil terminates its own defrost. Refrigeration will not start until all coils have terminated defrost.

A2L ELECTRICAL DATA

Medium Temperature Models - Copeland Discus™ Compressor/575V

Please consult AWEF table on page 71 to confirm DOE compliance per model

Model	Compressor	Compressor		Condenser		Air Defrost		Remote Loads: Four Contactors							
								Low Amps "4L"				High Amps "4H"			
		RLA	LRA	No. Fans	FLA (Total)	MCA	MOPD	Evap. Fan Amps	Defrost Htrs. Amps	Electric Defrost MCA	Electric Defrost MOPD	Evap. Fan Amps	Defrost Htrs. Amps	Electric Defrost MCA	Electric Defrost MOPD
BCV0150MEACE	3YS3R16ME	21.2	110.0	2.0	2.7	29.2	50.0	12	40	50.0	60	12	51	63.8	70
BCV0200MEACE	4YBNR19ME	28.2	135.0	2.0	2.7	38.0	60.0	12	44	55.0	70	12	51	63.8	70
BCV0250MEACE	4YHNR22ME	29.9	172.0	2.0	5.3	42.7	70.0	16	51	63.8	80	16	71	88.8	90
BCV0260MEACE	4YHNR22ME	29.9	172.0	2.0	5.3	42.7	70.0	16	64	80.0	80	16	71	88.8	90
BCV0300MEACE	4YJNR27ME	39.6	200.0	2.0	5.3	54.8	90.0	16	64	80.0	110	16	77	96.3	110
BCV0350MEACE	6YHNR32ME	36.5	230.0	3.0	4.1	49.7	80.0	16	64	80.0	100	16	77	96.3	100
BCV0400MEACE	6YJNR39ME	46.2	245.0	3.0	7.9	65.7	110.0	16	64	81.7	125	16	77	96.3	125
BCV0500MEACE	6YUNR48ME	56.2	335.2	4.0	5.4	75.7	125.0	16	64	91.7	125	16	77	96.3	125

Model	Compressor	Compressor		Condenser		Air Defrost		Remote Loads: Three Contactors							
								Low Amps "3L"				High Amps "3H"			
		RLA	LRA	No. Fans	FLA (Total)	MCA	MOPD	Evap. Fan Amps	Defrost Htrs. Amps	Electric Defrost MCA	Electric Defrost MOPD	Evap. Fan Amps	Defrost Htrs. Amps	Electric Defrost MCA	Electric Defrost MOPD
BCV0150MEACE	3YS3R16ME	21.2	110.0	2.0	2.7	29.2	50.0	12	40	50.0	60	12	51	63.8	70
BCV0200MEACE	4YBNR19ME	28.2	135.0	2.0	2.7	38.0	60.0	12	42	52.5	70	12	51	63.8	70
BCV0250MEACE	4YHNR22ME	29.9	172.0	2.0	5.3	42.7	70.0	12	60	75.0	80	12	64	80.0	80
BCV0260MEACE	4YHNR22ME	29.9	172.0	2.0	5.3	42.7	70.0	12	64	80.0	80	16	64	80.0	80
BCV0300MEACE	4YJNR27ME	39.6	200.0	2.0	5.3	54.8	90.0	16	64	80.0	110	16	77	96.3	110
BCV0350MEACE	6YHNR32ME	36.5	230.0	3.0	4.1	49.7	80.0	16	64	80.0	100	16	77	96.3	100
BCV0400MEACE	6YJNR39ME	46.2	245.0	3.0	7.9	65.7	110.0	16	64	81.7	125	16	77	96.3	125
BCV0500MEACE	6YUNR48ME	56.2	335.2	4.0	5.4	75.7	125.0	16	64	91.7	125	16	77	96.3	125

Notes:
MCA = Minimum Circuit Ampacity
MOP = Maximum Overcurrent Protection

intelliGen™ and Air Defrost Units do not carry any of the evaporator fan or heater loads.
Power is supplied directly to the evaporators and does not go through the condensing unit.
An evaporator heater hold out relay (option) is recommended when two or more evaporators are connected to a single (ACV) condensing unit to allow termination on coils that have already defrosted to prevent unnecessary steaming. This option is not needed on intelliGen™ systems wired for a Master / Slave operation.

Mounted Electric Defrost Kits for BLV condensing units include:
Defrost timer, spring terminal, (1) evaporator fan contactor and:
One (1) defrost heater contactor for 1L and 1H codes
Two (2) defrost heater contactors for 2L and 2H codes
Four (4) defrost heater contactors for 4L and 4H codes
Power is supplied to each intelliGen™ evaporator. volt electrical specification.
Each coil terminates its own defrost. Refrigeration will not start until all coils have terminated defrost.

A2L ELECTRICAL DATA

Medium Temperature Models - Copeland Discus™ Compressor/575V (cont.)

Please consult AWEF table on page 71 to confirm DOE compliance per model

Model	Compressor	Compressor		Condenser		Air Defrost		Remote Loads: Two Contactors							
								Low Amps "2L"				High Amps "2H"			
		RLA	LRA	No. Fans	FLA (Total)	MCA	MOPD	Evap. Fan Amps	Defrost Htrs. Amps	Electric Defrost MCA	Electric Defrost MOPD	Evap. Fan Amps	Defrost Htrs. Amps	Electric Defrost MCA	Electric Defrost MOPD
BCV0150MEACE	3YS3R16ME	21.2	110.0	2.0	2.7	29.2	50.0	12	38	47.5	60	12	42	52.5	60
BCV0200MEACE	4YBNR19ME	28.2	135.0	2.0	2.7	38.0	60.0	12	38	50.0	70	12	42	52.5	70
BCV0250MEACE	4YHNR22ME	29.9	172.0	2.0	5.3	42.7	70.0	12	38	54.7	80	12	64	80.0	80
BCV0260MEACE	4YHNR22ME	29.9	172.0	2.0	5.3	42.7	70.0	12	48	60.0	80	12	64	80.0	80
BCV0300MEACE	4YJNR27ME	39.6	200.0	2.0	5.3	54.8	90.0	12	48	66.8	100	16	77	96.3	110
BCV0350MEACE	6YHNR32ME	36.5	230.0	3.0	4.1	49.7	80.0	16	48	65.7	100	16	77	96.3	100
BCV0400MEACE	6YJNR39ME	46.2	245.0	3.0	7.9	65.7	110.0	16	48	81.7	125	16	77	96.3	125
BCV0500MEACE	6YUNR48ME	56.2	335.2	4.0	5.4	75.7	125.0	16	48	91.7	125	16	77	96.3	125

Model	Compressor	Compressor		Condenser		Air Defrost		Remote Loads: One Contactor							
								Low Amps "1L"				High Amps "1H"			
		RLA	LRA	No. Fans	FLA (Total)	MCA	MOPD	Evap. Fan Amps	Defrost Htrs. Amps	Electric Defrost MCA	Electric Defrost MOPD	Evap. Fan Amps	Defrost Htrs. Amps	Electric Defrost MCA	Electric Defrost MOPD
BCV0150MEACE	3YS3R16ME	21.2	110.0	2.0	2.7	29.2	50.0	12	32	41.2	60	12	38	47.5	60
BCV0200MEACE	4YBNR19ME	28.2	135.0	2.0	2.7	38.0	60.0	12	32	50.0	70	12	38	50.0	70
BCV0250MEACE	4YHNR22ME	29.9	172.0	2.0	5.3	42.7	70.0	—	—	—	—	—	—	—	—
BCV0260MEACE	4YHNR22ME	29.9	172.0	2.0	5.3	42.7	70.0	—	—	—	—	—	—	—	—
BCV0300MEACE	4YJNR27ME	39.6	200.0	2.0	5.3	54.8	90.0	—	—	—	—	—	—	—	—
BCV0350MEACE	6YHNR32ME	36.5	230.0	3.0	4.1	49.7	80.0	—	—	—	—	—	—	—	—
BCV0400MEACE	6YJNR39ME	46.2	245.0	3.0	7.9	65.7	110.0	—	—	—	—	—	—	—	—
BCV0500MEACE	6YUNR48ME	56.2	335.2	4.0	5.4	75.7	125.0	—	—	—	—	—	—	—	—

Notes:
MCA = Minimum Circuit Ampacity
MOP = Maximum Overcurrent Protection

intelliGen™ and Air Defrost Units do not carry any of the evaporator fan or heater loads.
Power is supplied directly to the evaporators and does not go through the condensing unit.
An evaporator heater hold out relay (option) is recommended when two or more evaporators are connected to a single (ACV) condensing unit to allow termination on coils that have already defrosted to prevent unnecessary steaming. This option is not needed on intelliGen™ systems wired for a Master / Slave operation.

Mounted Electric Defrost Kits for BLV condensing units include:
Defrost timer, spring terminal, (1) evaporator fan contactor and:
One (1) defrost heater contactor for 1L and 1H codes
Two (2) defrost heater contactors for 2L and 2H codes
Four (4) defrost heater contactors for 4L and 4H codes
Power is supplied to each intelliGen™ evaporator. volt electrical specification.
Each coil terminates its own defrost. Refrigeration will not start until all coils have terminated defrost.

A2L ELECTRICAL DATA

Medium Temperature High Efficiency Models - Copeland 208-230V

Please consult AWEF table on page 70 to confirm DOE compliance per model

Model	Compressor	Compressor		Condenser		Air Defrost		Remote Loads: Four Contactors							
								Low Amps "4L"				High Amps "4H"			
		RLA	LRA	No. Fans	FLA (Total)	MCA	MOPD	Evap. Fan Amps	Defrost Htrs. Amps	Electric Defrost MCA	Electric Defrost MOPD	Evap. Fan Amps	Defrost Htrs. Amps	Electric Defrost MCA	Electric Defrost MOPD
BCV0151MCACE	3YS3R16ME	53.5	275.0	2.0	7.0	73.9	125.0	25	96	120.0	150.0	25	108	135.0	150.0
BCV0201MCACE	4YBNR19ME	64.7	374.0	2.0	14.0	94.9	150.0	25	96	120.0	175.0	25	108	135.0	175.0
BCV0251MCACE	4YHNR22ME	66.8	428.0	3.0	10.5	94.0	150.0	25	125	156.3	175.0	30	181	226.3	250.0
BCV0301MCACE	4YJNR27ME	94.6	470.0	3.0	21.0	139.3	225.0	30	149	186.3	250.0	30	181	226.3	250.0
BCV0351MCACE	6YHNR32ME	112.3	565.0	4.0	14.0	154.4	250.0	35	160	200.0	300.0	35	192	240.0	300.0
BCV0401MCACE	6YJNR39ME	128.2	594.0	4.0	28.0	188.3	300.0	35	160	223.3	350.0	35	192	240.0	350.0

Model	Compressor	Compressor		Condenser		Air Defrost		Remote Loads: Three Contactors							
								Low Amps "3L"				High Amps "3H"			
		RLA	LRA	No. Fans	FLA (Total)	MCA	MOPD	Evap. Fan Amps	Defrost Htrs. Amps	Electric Defrost MCA	Electric Defrost MOPD	Evap. Fan Amps	Defrost Htrs. Amps	Electric Defrost MCA	Electric Defrost MOPD
BCV0151MCACE	3YS3R16ME	53.5	275.0	2.0	7.0	73.9	125.0	25	80	100.0	150.0	25	64	98.9	150.0
BCV0201MCACE	4YBNR19ME	64.7	374.0	2.0	14.0	94.9	150.0	20	96	120.0	175.0	20	96	120.0	175.0
BCV0251MCACE	4YHNR22ME	66.8	428.0	3.0	10.5	94.0	150.0	20	96	120.0	175.0	25	120	150.0	175.0
BCV0301MCACE	4YJNR27ME	94.6	470.0	3.0	21.0	139.3	225.0	25	125	164.3	250.0	25	125	164.3	250.0
BCV0351MCACE	6YHNR32ME	112.3	565.0	4.0	14.0	154.4	250.0	30	130	184.4	250.0	35	144	189.4	300.0
BCV0401MCACE	6YJNR39ME	128.2	594.0	4.0	28.0	188.3	300.0	30	130	218.3	300.0	35	144	223.3	350.0

Notes:
MCA = Minimum Circuit Ampacity
MOP = Maximum Overcurrent Protection

intelliGen™ and Air Defrost Units do not carry any of the evaporator fan or heater loads.
Power is supplied directly to the evaporators and does not go through the condensing unit.
An evaporator heater hold out relay (option) is recommended when two or more evaporators are connected to a single (ACV) condensing unit to allow termination on coils that have already defrosted to prevent unnecessary steaming. This option is not needed on intelliGen™ systems wired for a Master / Slave operation.

Mounted Electric Defrost Kits for BLV condensing units include:
Defrost timer, spring terminal, (1) evaporator fan contactor and:
One (1) defrost heater contactor for 1L and 1H codes
Two (2) defrost heater contactors for 2L and 2H codes
Four (4) defrost heater contactors for 4L and 4H codes
Power is supplied to each intelliGen™ evaporator. volt electrical specification.
Each coil terminates its own defrost. Refrigeration will not start until all coils have terminated defrost.

A2L ELECTRICAL DATA

Medium Temperature High Efficiency Models - Copeland 208-230V (cont.)

Please consult AWEF table on page 70 to confirm DOE compliance per model

								Remote Loads: Two Contactors							
								Low Amps "2L"				High Amps "2H"			
Model	Compressor	Compressor		Condenser		Air Defrost		Evap. Fan Amps	Defrost Htrs. Amps	Electric Defrost		Evap. Fan Amps	Defrost Htrs. Amps	Electric Defrost	
		RLA	LRA	No. Fans	FLA (Total)	MCA	MOPD			MCA	MOPD			MCA	MOPD
BCV0151MCACE	3YS3R16ME	53.5	275.0	2.0	7.0	73.9	125.0	25	80	100.0	150.0	25	96	120.0	150.0
BCV0201MCACE	4YBNR19ME	64.7	374.0	2.0	14.0	94.9	150.0	20	80	114.9	175.0	20	96	120.0	175.0
BCV0251MCACE	4YHNR22ME	66.8	428.0	3.0	10.5	94.0	150.0	—	—	—	—	—	—	—	—
BCV0301MCACE	4YJNR27ME	94.6	470.0	3.0	21.0	139.3	225.0	—	—	—	—	—	—	—	—
BCV0351MCACE	6YHNR32ME	112.3	565.0	4.0	14.0	154.4	250.0	—	—	—	—	—	—	—	—
BCV0401MCACE	6YJNR39ME	128.2	594.0	4.0	28.0	188.3	300.0	—	—	—	—	—	—	—	—

Notes:
MCA = Minimum Circuit Ampacity
MOP = Maximum Overcurrent Protection

intelliGen™ and Air Defrost Units do not carry any of the evaporator fan or heater loads.
Power is supplied directly to the evaporators and does not go through the condensing unit.
An evaporator heater hold out relay (option) is recommended when two or more evaporators are connected to a single (ACV) condensing unit to allow termination on coils that have already defrosted to prevent unnecessary steaming. This option is not needed on intelliGen™ systems wired for a Master / Slave operation.

Mounted Electric Defrost Kits for BLV condensing units include:
Defrost timer, spring terminal, (1) evaporator fan contactor and:
One (1) defrost heater contactor for 1L and 1H codes
Two (2) defrost heater contactors for 2L and 2H codes
Four (4) defrost heater contactors for 4L and 4H codes
Power is supplied to each intelliGen™ evaporator. volt electrical specification.
Each coil terminates its own defrost. Refrigeration will not start until all coils have terminated defrost.

A2L ELECTRICAL DATA

Medium Temperature High Efficiency Models - Copeland 460V

Please consult AWEF table on page 70 to confirm DOE compliance per model

Model	Compressor	Compressor		Condenser		Air Defrost		Remote Loads: Four Contactors							
								Low Amps "4L"				High Amps "4H"			
								Evap. Fan Amps	Defrost Htrs. Amps	Electric Defrost		Evap. Fan Amps	Defrost Htrs. Amps	Electric Defrost	
		RLA	LRA	No. Fans	FLA (Total)	MCA	MOPD			MCA	MOPD			MCA	MOPD
BCV0151MDACE	3YS3R16ME	26.0	138.0	2.0	3.4	35.9	60.0	15	48	60.0	70.0	15	64	80.0	80.0
BCV0201MDACE	4YBNR19ME	32.4	187.0	2.0	7.0	47.5	70.0	15	48	62.5	90.0	15	64	80.0	90.0
BCV0251MDACE	4YHNR22ME	33.4	214.0	3.0	5.1	46.9	80.0	20	64	80.0	100.0	20	96	120.0	125.0
BCV0301MDACE	4YJNR27ME	47.3	235.0	3.0	10.5	69.6	110.0	20	64	89.6	125.0	20	96	120.0	125.0
BCV0351MDACE	6YHNR32ME	56.2	283.0	4.0	6.8	77.0	125.0	20	64	97.1	150.0	20	96	120.0	150.0
BCV0401MDACE	6YJNR39ME	64.1	297.0	4.0	14.0	94.1	150.0	20	64	114.1	175.0	20	96	120.0	175.0

Model	Compressor	Compressor		Condenser		Air Defrost		Remote Loads: Three Contactors							
								Low Amps "3L"				High Amps "3H"			
								Evap. Fan Amps	Defrost Htrs. Amps	Electric Defrost		Evap. Fan Amps	Defrost Htrs. Amps	Electric Defrost	
		RLA	LRA	No. Fans	FLA (Total)	MCA	MOPD			MCA	MOPD			MCA	MOPD
BCV0151MDACE	3YS3R16ME	26.0	138.0	2.0	3.4	35.9	60.0	15	48	60.0	70.0	15	64	80.0	80.0
BCV0201MDACE	4YBNR19ME	32.4	187.0	2.0	7.0	47.5	70.0	15	48	62.5	90.0	15	64	80.0	90.0
BCV0251MDACE	4YHNR22ME	33.4	214.0	3.0	5.1	46.9	80.0	15	64	80.0	90.0	20	80	100.0	100.0
BCV0301MDACE	4YJNR27ME	47.3	235.0	3.0	10.5	69.6	110.0	20	80	100.0	125.0	20	80	100.0	125.0
BCV0351MDACE	6YHNR32ME	56.2	283.0	4.0	6.8	77.0	125.0	20	64	97.1	150.0	20	96	120.0	150.0
BCV0401MDACE	6YJNR39ME	64.1	297.0	4.0	14.0	94.1	150.0	20	80	114.1	175.0	20	80	114.1	175.0

Notes:
MCA = Minimum Circuit Ampacity
MOP = Maximum Overcurrent Protection

intelliGen™ and Air Defrost Units do not carry any of the evaporator fan or heater loads.
Power is supplied directly to the evaporators and does not go through the condensing unit.
An evaporator heater hold out relay (option) is recommended when two or more evaporators are connected to a single (ACV) condensing unit to allow termination on coils that have already defrosted to prevent unnecessary steaming. This option is not needed on intelliGen™ systems wired for a Master / Slave operation.

Mounted Electric Defrost Kits for BLV condensing units include:
Defrost timer, spring terminal, (1) evaporator fan contactor and:
One (1) defrost heater contactor for 1L and 1H codes
Two (2) defrost heater contactors for 2L and 2H codes
Four (4) defrost heater contactors for 4L and 4H codes
Power is supplied to each intelliGen™ evaporator. volt electrical specification.
Each coil terminates its own defrost. Refrigeration will not start until all coils have terminated defrost.

A2L ELECTRICAL DATA

Medium Temperature High Efficiency Models - Copeland 460V (cont.)

Please consult AWEF table on page 70 to confirm DOE compliance per model

Model	Compressor	Compressor		Condenser		Air Defrost		Remote Loads: Two Contactors							
								Low Amps "2L"				High Amps "2H"			
		RLA	LRA	No. Fans	FLA (Total)	MCA	MOPD	Evap. Fan Amps	Defrost Htrs. Amps	Electric Defrost MCA	Electric Defrost MOPD	Evap. Fan Amps	Defrost Htrs. Amps	Electric Defrost MCA	Electric Defrost MOPD
BCV0151MDACE	3YS3R16ME	26.0	138.0	2.0	3.4	35.9	60.0	15	48	60.0	70.0	15	64	80.0	80.0
BCV0201MDACE	4YBNR19ME	32.4	187.0	2.0	7.0	47.5	70.0	15	48	62.5	90.0	15	64	80.0	90.0
BCV0251MDACE	4YHNR22ME	33.4	214.0	3.0	5.1	46.9	80.0	15	48	61.9	90.0	15	80	100.0	100.0
BCV0301MDACE	4YJNR27ME	47.3	235.0	3.0	10.5	69.6	110.0	15	80	100.0	125.0	20	96	120.0	125.0
BCV0351MDACE	6YHNR32ME	56.2	283.0	4.0	6.8	77.0	125.0	20	80	100.0	150.0	20	96	120.0	150.0
BCV0401MDACE	6YJNR39ME	64.1	297.0	4.0	14.0	94.1	150.0	20	80	114.1	175.0	20	96	120.0	175.0

Model	Compressor	Compressor		Condenser		Air Defrost		Remote Loads: One Contactor							
								Low Amps "1L"				High Amps "1H"			
		RLA	LRA	No. Fans	FLA (Total)	MCA	MOPD	Evap. Fan Amps	Defrost Htrs. Amps	Electric Defrost MCA	Electric Defrost MOPD	Evap. Fan Amps	Defrost Htrs. Amps	Electric Defrost MCA	Electric Defrost MOPD
BCV0151MDACE	3YS3R16ME	26.0	138.0	2.0	3.4	35.9	60.0	15	40	50.9	70.0	15	48	60.0	70.0
BCV0201MDACE	4YBNR19ME	32.4	187.0	2.0	7.0	47.5	70.0	15	40	62.5	90.0	15	48	62.5	90.0
BCV0251MDACE	4YHNR22ME	33.4	214.0	3.0	5.1	46.9	80.0	—	—	—	—	—	—	—	—
BCV0301MDACE	4YJNR27ME	47.3	235.0	3.0	10.5	69.6	110.0	—	—	—	—	—	—	—	—
BCV0351MDACE	6YHNR32ME	56.2	283.0	4.0	6.8	77.0	125.0	—	—	—	—	—	—	—	—
BCV0401MDACE	6YJNR39ME	64.1	297.0	4.0	14.0	94.1	150.0	—	—	—	—	—	—	—	—

Notes:
MCA = Minimum Circuit Ampacity
MOP = Maximum Overcurrent Protection

intelliGen™ and Air Defrost Units do not carry any of the evaporator fan or heater loads.
Power is supplied directly to the evaporators and does not go through the condensing unit.
An evaporator heater hold out relay (option) is recommended when two or more evaporators are connected to a single (ACV) condensing unit to allow termination on coils that have already defrosted to prevent unnecessary steaming. This option is not needed on intelliGen™ systems wired for a Master / Slave operation.

Mounted Electric Defrost Kits for BLV condensing units include:
Defrost timer, spring terminal, (1) evaporator fan contactor and:
One (1) defrost heater contactor for 1L and 1H codes
Two (2) defrost heater contactors for 2L and 2H codes
Four (4) defrost heater contactors for 4L and 4H codes
Power is supplied to each intelliGen™ evaporator. volt electrical specification.
Each coil terminates its own defrost. Refrigeration will not start until all coils have terminated defrost.

A2L ELECTRICAL DATA

Medium Temperature High Efficiency Models - Copeland 575V

Please consult AWEF table on page 70 to confirm DOE compliance per model

Model	Compressor	Compressor		Condenser		Air Defrost		Remote Loads: Four Contactors							
								Low Amps "4L"				High Amps "4H"			
								Evap. Fan Amps	Defrost Htrs. Amps	Electric Defrost		Evap. Fan Amps	Defrost Htrs. Amps	Electric Defrost	
		RLA	LRA	No. Fans	FLA (Total)	MCA	MOPD			MCA	MOPD			MCA	MOPD
BCV0151MEACE	3YS3R16ME	21.2	110.0	2.0	2.7	29.2	50.0	12	40	50.0	60.0	12	51	63.8	70.0
BCV0201MEACE	4YBNR19ME	28.2	135.0	2.0	5.6	40.9	60.0	12	44	55.0	80.0	12	51	63.8	80.0
BCV0251MEACE	4YHNR22ME	29.9	172.0	3.0	4.1	41.5	70.0	16	51	63.8	80.0	16	71	88.8	90.0
BCV0301MEACE	4YJNR27ME	39.6	200.0	3.0	8.4	57.9	90.0	16	64	80.0	110.0	16	77	96.3	110.0
BCV0351MEACE	6YHNR32ME	36.5	230.0	4.0	5.4	51.1	80.0	16	64	80.0	100.0	16	77	96.3	100.0
BCV0401MEACE	6YJNR39ME	46.2	245.0	4.0	11.2	69.0	110.0	16	64	85.0	125.0	16	77	96.3	125.0

Model	Compressor	Compressor		Condenser		Air Defrost		Remote Loads: Three Contactors							
								Low Amps "3L"				High Amps "3H"			
								Evap. Fan Amps	Defrost Htrs. Amps	Electric Defrost		Evap. Fan Amps	Defrost Htrs. Amps	Electric Defrost	
		RLA	LRA	No. Fans	FLA (Total)	MCA	MOPD			MCA	MOPD			MCA	MOPD
BCV0151MEACE	3YS3R16ME	21.2	110.0	2.0	2.7	29.2	50.0	12	40	50.0	60.0	12	48	60.0	60.0
BCV0201MEACE	4YBNR19ME	28.2	135.0	2.0	5.6	40.9	60.0	12	42	52.9	80.0	12	48	60.0	80.0
BCV0251MEACE	4YHNR22ME	29.9	172.0	3.0	4.1	41.5	70.0	12	51	63.8	80.0	12	64	80.0	80.0
BCV0301MEACE	4YJNR27ME	39.6	200.0	3.0	8.4	57.9	90.0	16	64	80.0	110.0	16	77	96.3	110.0
BCV0351MEACE	6YHNR32ME	36.5	230.0	4.0	5.4	51.1	80.0	16	64	80.0	100.0	16	77	96.3	100.0
BCV0401MEACE	6YJNR39ME	46.2	245.0	4.0	11.2	69.0	110.0	16	64	85.0	125.0	16	77	96.3	125.0

Notes:
MCA = Minimum Circuit Ampacity
MOP = Maximum Overcurrent Protection

intelliGen™ and Air Defrost Units do not carry any of the evaporator fan or heater loads.
Power is supplied directly to the evaporators and does not go through the condensing unit.
An evaporator heater hold out relay (option) is recommended when two or more evaporators are connected to a single (ACV) condensing unit to allow termination on coils that have already defrosted to prevent unnecessary steaming. This option is not needed on intelliGen™ systems wired for a Master / Slave operation.

Mounted Electric Defrost Kits for BLV condensing units include:
Defrost timer, spring terminal, (1) evaporator fan contactor and:
One (1) defrost heater contactor for 1L and 1H codes
Two (2) defrost heater contactors for 2L and 2H codes
Four (4) defrost heater contactors for 4L and 4H codes
Power is supplied to each intelliGen™ evaporator. volt electrical specification.
Each coil terminates its own defrost. Refrigeration will not start until all coils have terminated defrost.

A2L ELECTRICAL DATA

Medium Temperature High Efficiency Models - Copeland 575V (cont.)

Please consult AWEF table on page 71 to confirm DOE compliance per model

Model	Compressor	Compressor		Condenser		Air Defrost		Remote Loads: Two Contactors							
								Low Amps "2L"				High Amps "2H"			
		RLA	LRA	No. Fans	FLA (Total)	MCA	MOPD	Evap. Fan Amps	Defrost Htrs. Amps	Electric Defrost MCA	Electric Defrost MOPD	Evap. Fan Amps	Defrost Htrs. Amps	Electric Defrost MCA	Electric Defrost MOPD
BCV0151MEACE	3YS3R16ME	21.2	110.0	2.0	2.7	29.2	50.0	12	38	47.5	60.0	12	42	52.5	60.0
BCV0201MEACE	4YBNR19ME	28.2	135.0	2.0	5.6	40.9	60.0	12	38	52.9	80.0	12	42	52.9	80.0
BCV0251MEACE	4YHNR22ME	29.9	172.0	3.0	4.1	41.5	70.0	12	38	53.5	80.0	12	64	80.0	80.0
BCV0301MEACE	4YJNR27ME	39.6	200.0	3.0	8.4	57.9	90.0	12	48	69.9	100.0	16	77	96.3	110.0
BCV0351MEACE	6YHNR32ME	36.5	230.0	4.0	5.4	51.1	80.0	16	48	67.1	100.0	16	77	96.3	100.0
BCV0401MEACE	6YJNR39ME	46.2	245.0	4.0	11.2	69.0	110.0	16	48	85.0	125.0	16	77	96.3	125.0

Model	Compressor	Compressor		Condenser		Air Defrost		Remote Loads: One Contactor							
								Low Amps "1L"				High Amps "1H"			
		RLA	LRA	No. Fans	FLA (Total)	MCA	MOPD	Evap. Fan Amps	Defrost Htrs. Amps	Electric Defrost MCA	Electric Defrost MOPD	Evap. Fan Amps	Defrost Htrs. Amps	Electric Defrost MCA	Electric Defrost MOPD
BCV0151MEACE	3YS3R16ME	21.2	110.0	2.0	2.7	29.2	50.0	12	32	41.2	60.0	12	38	47.5	60.0
BCV0201MEACE	4YBNR19ME	28.2	135.0	2.0	5.6	40.9	60.0	12	32	52.9	80.0	12	38	52.9	80.0
BCV0251MEACE	4YHNR22ME	29.9	172.0	3.0	4.1	41.5	70.0	—	—	—	—	—	—	—	—
BCV0301MEACE	4YJNR27ME	39.6	200.0	3.0	8.4	57.9	90.0	—	—	—	—	—	—	—	—
BCV0351MEACE	6YHNR32ME	36.5	230.0	4.0	5.4	51.1	80.0	—	—	—	—	—	—	—	—
BCV0401MEACE	6YJNR39ME	46.2	245.0	4.0	11.2	69.0	110.0	—	—	—	—	—	—	—	—

Notes:
MCA = Minimum Circuit Ampacity
MOP = Maximum Overcurrent Protection

intelliGen™ and Air Defrost Units do not carry any of the evaporator fan or heater loads.
Power is supplied directly to the evaporators and does not go through the condensing unit.
An evaporator heater hold out relay (option) is recommended when two or more evaporators are connected to a single (ACV) condensing unit to allow termination on coils that have already defrosted to prevent unnecessary steaming. This option is not needed on intelliGen™ systems wired for a Master / Slave operation.

Mounted Electric Defrost Kits for BLV condensing units include:
Defrost timer, spring terminal, (1) evaporator fan contactor and:
One (1) defrost heater contactor for 1L and 1H codes
Two (2) defrost heater contactors for 2L and 2H codes
Four (4) defrost heater contactors for 4L and 4H codes
Power is supplied to each intelliGen™ evaporator. volt electrical specification.
Each coil terminates its own defrost. Refrigeration will not start until all coils have terminated defrost.

A2L ELECTRICAL DATA

Low Temperature Models - Copeland Discus™ Compressor/208-230V

Please consult AWEF table on page 70 to confirm DOE compliance per model

Model	Compressor	Compressor		Condenser		Air Defrost		Remote Loads: Four Contactors							
								Low Amps "4L"				High Amps "4H"			
								Evap. Fan Amps	Defrost Htrs. Amps	Electric Defrost		Evap. Fan Amps	Defrost Htrs. Amps	Electric Defrost	
		RLA	LRA	No. Fans	FLA (Total)	MCA	MOPD			MCA	MOPD			MCA	MOPD
BCV0120LCACE	4YBNF40KE	46.0	220	2	13.2	70.7	110	22	48	92.7	125	22	64	92.7	125
BCV0150LCACE	4YHNF46KE	47.2	278	2	13.2	72.2	110	25	64	97.2	125	25	91	113.8	125
BCV0220LCACE	4YJNF59KE	57.7	374	2	13.2	85.3	125	25	96	120.0	150	25	105	131.3	150
BCV0270LCACE	6YHNF68KE	72.4	450	2	13.2	103.7	175	25	96	128.7	200	25	108	135.0	200
BCV0300LCACE	6YJNF84KE	85.8	470	2	13.2	120.5	200	30	150	187.5	225	30	181	226.3	250

Model	Compressor	Compressor		Condenser		Air Defrost		Remote Loads: Three Contactors							
								Low Amps "3L"				High Amps "3H"			
								Evap. Fan Amps	Defrost Htrs. Amps	Electric Defrost		Evap. Fan Amps	Defrost Htrs. Amps	Electric Defrost	
		RLA	LRA	No. Fans	FLA (Total)	MCA	MOPD			MCA	MOPD			MCA	MOPD
BCV0120LCACE	4YBNF40KE	46.0	220	2	13.2	70.7	110	20	40	90.7	125	22	48	92.7	125
BCV0150LCACE	4YHNF46KE	47.2	278	2	13.2	72.2	110	22	70	94.2	125	25	64	97.2	125
BCV0220LCACE	4YJNF59KE	57.7	374	2	13.2	85.3	125	20	85	106.3	150	25	96	120.0	150
BCV0270LCACE	6YHNF68KE	72.4	450	2	13.2	103.7	175	20	80	123.7	175	25	96	128.7	200
BCV0300LCACE	6YJNF84KE	85.8	470	2	13.2	120.5	200	20	96	140.5	225	25	96	145.5	225

Notes:

Λ C = 203-230/3/60
MCA = Minimum Circuit Ampacity
MOP = Maximum Overcurrent Protection
intelliGen™ and Air Defrost Units do not carry any of the evaporator fan or heater loads.
Power is supplied directly to the evaporators and does not go through the condensing unit.
An evaporator heater hold out relay (option) is recommended when two or more evaporators are connected to a single (BCV) condensing unit to allow termination on coils that have already defrosted to prevent unnecessary steaming. This option is not needed on A0400 intelliGen™ systems wired for a Master / Slave operation.

Mounted Electric Defrost Kits for BCV condensing units include:
Defrost timer, terminal strip, (1) evaporator fan contactor and:
One (1) defrost heater contactor for 1L and 1H codes
Two (2) defrost heater contactors for 2L and 2H codes
Four (4) defrost heater contactors for 4L and 4H codes
Power is supplied to each intelliGen™ evaporator. volt electrical specification.
Each coil terminates its own defrost. Refrigeration will not start until all coils have terminated defrost.

A2L ELECTRICAL DATA

Low Temperature Models - Copeland Discus™ Compressor/208-230V (cont.)

Please consult AWEF table on page 70 to confirm DOE compliance per model

Model	Compressor	Compressor		Condenser		Air Defrost		Remote Loads: Two Contactors							
								Low Amps "2L"				High Amps "2H"			
								Evap. Fan Amps	Defrost Htrs. Amps	Electric Defrost		Evap. Fan Amps	Defrost Htrs. Amps	Electric Defrost	
		RLA	LRA	No. Fans	FLA (Total)	MCA	MOPD			MCA	MOPD			MCA	MOPD
BCV0120LCACE	4YBNF40KE	46.0	220	2	13.2	70.7	110	15	34	85.7	125	20	74	92.5	125
BCV0150LCACE	4YHNF46KE	47.2	278	2	13.2	72.2	110	20	80	100.0	125	20	91	113.8	125
BCV0220LCACE	4YJNF59KE	57.7	374	2	13.2	85.3	125	20	80	105.3	150	20	96	120.0	150
BCV0270LCACE	6YHNF68KE	72.4	450	2	13.2	103.7	175	20	80	123.7	175	20	96	123.7	175
BCV0300LCACE	6YJNF84KE	85.8	470	2	13.2	120.5	200	20	80	140.5	225	20	96	140.5	225

Model	Compressor	Compressor		Condenser		Air Defrost		Remote Loads: One Contactor							
								Low Amps "1L"				High Amps "1H"			
								Evap. Fan Amps	Defrost Htrs. Amps	Electric Defrost		Evap. Fan Amps	Defrost Htrs. Amps	Electric Defrost	
		RLA	LRA	No. Fans	FLA (Total)	MCA	MOPD			MCA	MOPD			MCA	MOPD
BCV0120LCACE	4YBNF40KE	46.0	220	2	13.2	70.7	110	15	40	85.7	125	15	48	85.7	125
BCV0150LCACE	4YHNF46KE	47.2	278	2	13.2	72.2	110	15	40	87.2	125	15	48	87.2	125
BCV0220LCACE	4YJNF59KE	57.7	374	2	13.2	85.3	125	15	40	100.3	150	15	48	100.3	150
BCV0270LCACE	6YHNF68KE	72.4	450	2	13.2	103.7	175	—	—	—	—	—	—	—	—
BCV0300LCACE	6YJNF84KE	85.8	470	2	13.2	120.5	200	—	—	—	—	—	—	—	—

Notes:
MCA = Minimum Circuit Ampacity
MOP = Maximum Overcurrent Protection
intelliGen™ and Air Defrost Units do not carry any of the evaporator fan or heater loads.
Power is supplied directly to the evaporators and does not go through the condensing unit.
An evaporator heater hold out relay (option) is recommended when two or more evaporators are connected to a single (BCV) condensing unit to allow termination on coils that have already defrosted to prevent unnecessary steaming. This option is not needed on A0400 intelliGen™ systems wired for a Master / Slave operation.

Mounted Electric Defrost Kits for BCV condensing units include:
Defrost timer, terminal strip, (1) evaporator fan contactor and:
One (1) defrost heater contactor for 1L and 1H codes
Two (2) defrost heater contactors for 2L and 2H codes
Four (4) defrost heater contactors for 4L and 4H codes
Power is supplied to each intelliGen™ evaporator. volt electrical specification.
Each coil terminates its own defrost. Refrigeration will not start until all coils have terminated defrost.

A2L ELECTRICAL DATA

Low Temperature Models - Copeland Discus™ Compressor/460V

Please consult AWEF table on page 71 to confirm DOE compliance per model

Model	Compressor	Compressor		Condenser		Air Defrost		Remote Loads: Four Contactors							
								Low Amps "4L"				High Amps "4H"			
								Evap. Fan Amps	Defrost Htrs. Amps	Electric Defrost		Evap. Fan Amps	Defrost Htrs. Amps	Electric Defrost	
		RLA	LRA	No. Fans	FLA (Total)	MCA	MOPD			MCA	MOPD			MCA	MOPD
BCV0120LDACE	4YBNF40KE	23.0	110	2	6.6	35.4	50.0	—	—	—	—	—	—	—	—
BCV0150LDACE	4YHNF46KE	23.6	139	2	6.6	36.1	50.0	15	48	60.0	70	15	48	60.0	70
BCV0220LDACE	4YJNF59KE	28.8	187	2	6.6	42.6	70.0	15	48	60.0	80	15	48	60.0	80
BCV0270LDACE	6YHNF68KE	36.2	225	2	6.6	51.9	80.0	15	48	66.9	100	15	64	80.0	100
BCV0300LDACE	6YJNF84KE	42.9	235	2	6.6	60.2	100.0	20	64	80.2	110	20	91	113.8	125
BCV0400LDACE	6YUNF10ME	60.9	367	3	9.9	86.0	125.0	20	64	106.0	150	20	91	113.8	150

Model	Compressor	Compressor		Condenser		Air Defrost		Remote Loads: Three Contactors							
								Low Amps "3L"				High Amps "3H"			
								Evap. Fan Amps	Defrost Htrs. Amps	Electric Defrost		Evap. Fan Amps	Defrost Htrs. Amps	Electric Defrost	
		RLA	LRA	No. Fans	FLA (Total)	MCA	MOPD			MCA	MOPD			MCA	MOPD
BCV0120LDACE	4YBNF40KE	23.0	110	2	6.6	35.4	50.0	15	22	50.4	70	20	22	55.4	70
BCV0150LDACE	4YHNF46KE	23.6	139	2	6.6	36.1	50.0	15	32	51.1	70	15	48	60.0	70
BCV0220LDACE	4YJNF59KE	28.8	187	2	6.6	42.6	70.0	15	48	60.0	80	15	48	60.0	80
BCV0270LDACE	6YHNF68KE	36.2	225	2	6.6	51.9	80.0	15	48	66.9	100	15	64	80.0	100
BCV0300LDACE	6YJNF84KE	42.9	235	2	6.6	60.2	100.0	15	64	80.0	110	22	64	82.2	125
BCV0400LDACE	6YUNF10ME	60.9	367	3	9.9	86.0	125.0	15	64	101.0	150	22	64	108.0	150

Notes:
MCA = Minimum Circuit Ampacity
MOP = Maximum Overcurrent Protection

intelliGen™ and Air Defrost Units do not carry any of the evaporator fan or heater loads.
Power is supplied directly to the evaporators and does not go through the condensing unit.
An evaporator heater hold out relay (option) is recommended when two or more evaporators are connected to a single (ACV) condensing unit to allow termination on coils that have already defrosted to prevent unnecessary steaming. This option is not needed on intelliGen™ systems wired for a Master / Slave operation.

Mounted Electric Defrost Kits for BLV condensing units include:
Defrost timer, spring terminal, (1) evaporator fan contactor and:
One (1) defrost heater contactor for 1L and 1H codes
Two (2) defrost heater contactors for 2L and 2H codes
Four (4) defrost heater contactors for 4L and 4H codes
Power is supplied to each intelliGen™ evaporator. volt electrical specification.
Each coil terminates its own defrost. Refrigeration will not start until all coils have terminated defrost.

A2L ELECTRICAL DATA

Low Temperature Models - Copeland Discus™ Compressor/460V (cont.)

Please consult AWEF table on page 71 to confirm DOE compliance per model

Model	Compressor	Compressor		Condenser		Air Defrost		Remote Loads: Two Contactors							
								Low Amps "2L"				High Amps "2H"			
								Evap. Fan Amps	Defrost Htrs. Amps	Electric Defrost		Evap. Fan Amps	Defrost Htrs. Amps	Electric Defrost	
		RLA	LRA	No. Fans	FLA (Total)	MCA	MOPD			MCA	MOPD			MCA	MOPD
BCV0120LDACE	4YBNF40KE	23.0	110	2	6.6	35.4	50.0	10	19	45.4	60	15	38	50.4	70
BCV0150LDACE	4YHNF46KE	23.6	139	2	6.6	36.1	50.0	15	32	51.1	70	15	48	60.0	70
BCV0220LDACE	4YJNF59KE	28.8	187	2	6.6	42.6	70.0	15	48	60.0	80	15	64	80.0	80
BCV0270LDACE	6YHNF68KE	36.2	225	2	6.6	51.9	80.0	15	48	66.9	100	15	64	80.0	100
BCV0300LDACE	6YJNF84KE	42.9	235	2	6.6	60.2	100.0	15	48	75.2	110	15	80	100.0	110
BCV0400LDACE	6YUNF10ME	60.9	367	3	9.9	86.0	125.0	15	48	101.0	150	15	80	101.0	150

Model	Compressor	Compressor		Condenser		Air Defrost		Remote Loads: One Contactor							
								Low Amps "1L"				High Amps "1H"			
								Evap. Fan Amps	Defrost Htrs. Amps	Electric Defrost		Evap. Fan Amps	Defrost Htrs. Amps	Electric Defrost	
		RLA	LRA	No. Fans	FLA (Total)	MCA	MOPD			MCA	MOPD			MCA	MOPD
BCV0120LDACE	4YBNF40KE	23.0	110	2	6.6	35.4	50.0	10	19	45.4	60	10	24	45.4	60
BCV0150LDACE	4YHNF46KE	23.6	139	2	6.6	36.1	50.0	15	24	51.1	70	15	40	51.1	70
BCV0220LDACE	4YJNF59KE	28.8	187	2	6.6	42.6	70.0	15	40	57.6	80	15	48	60.0	80
BCV0270LDACE	6YHNF68KE	36.2	225	2	6.6	51.9	80.0	15	40	66.9	100	15	48	66.9	100
BCV0300LDACE	6YJNF84KE	42.9	235	2	6.6	60.2	100.0	15	40	75.2	110	15	48	75.2	110
BCV0400LDACE	6YUNF10ME	60.9	367	3	9.9	86.0	125.0	15	40	101.0	150	15	48	101.0	150

Notes:
MCA = Minimum Circuit Ampacity
MOP = Maximum Overcurrent Protection

intelliGen™ and Air Defrost Units do not carry any of the evaporator fan or heater loads.
Power is supplied directly to the evaporators and does not go through the condensing unit.
An evaporator heater hold out relay (option) is recommended when two or more evaporators are connected to a single (ACV) condensing unit to allow termination on coils that have already defrosted to prevent unnecessary steaming. This option is not needed on intelliGen™ systems wired for a Master / Slave operation.

Mounted Electric Defrost Kits for BLV condensing units include:
Defrost timer, spring terminal, (1) evaporator fan contactor and:
One (1) defrost heater contactor for 1L and 1H codes
Two (2) defrost heater contactors for 2L and 2H codes
Four (4) defrost heater contactors for 4L and 4H codes
Power is supplied to each intelliGen™ evaporator. volt electrical specification.
Each coil terminates its own defrost. Refrigeration will not start until all coils have terminated defrost.

A2L ELECTRICAL DATA

Low Temperature Models - Copeland Discus™Compressors/575V

Please consult AWEF table on page 71 to confirm DOE compliance per model

Model	Compressor	Compressor		Condenser		Air Defrost		Remote Loads: Four Contactors							
								Low Amps "4L"				High Amps "4H"			
								Evap. Fan Amps	Defrost Htrs. Amps	Electric Defrost		Evap. Fan Amps	Defrost Htrs. Amps	Electric Defrost	
		RLA	LRA	No. Fans	FLA (Total)	MCA	MOPD			MCA	MOPD			MCA	MOPD
BCV0120LEACE	4YBNF40KE	15.6	106	2	5.28	24.8	40.0	—	—	—	—	—	—	—	—
BCV0150LEACE	4YHNF46KE	18.8	113	2	5.28	28.8	45.0	12	38	47.5	50	12	38	47.5	50
BCV0220LEACE	4YJNF59KE	26.1	135	2	5.28	37.9	60.0	12	40	50.0	70	12	40	50.0	70
BCV0270LEACE	6YHNF68KE	29.2	172	2	5.28	41.8	70.0	12	48	60.0	80	12	51	63.8	80
BCV0300LEACE	6YJNF84KE	35.5	200	2	5.28	49.7	80.0	16	64	80.0	100	16	72.6	90.8	100
BCV0400LEACE	6YUNF10ME	48.0	335.2	3	7.92	67.9	110.0	16	64	83.9	125	16	72.6	90.8	125

Model	Compressor	Compressor		Condenser		Air Defrost		Remote Loads: Three Contactors							
								Low Amps "3L"				High Amps "3H"			
								Evap. Fan Amps	Defrost Htrs. Amps	Electric Defrost		Evap. Fan Amps	Defrost Htrs. Amps	Electric Defrost	
		RLA	LRA	No. Fans	FLA (Total)	MCA	MOPD			MCA	MOPD			MCA	MOPD
BCV0120LEACE	4YBNF40KE	15.6	106	2	5.28	24.8	40.0	—	—	—	—	—	—	—	—
BCV0150LEACE	4YHNF46KE	18.8	113	2	5.28	28.8	45.0	12	38	47.5	50	12	40	50.0	50
BCV0220LEACE	4YJNF59KE	26.1	135	2	5.28	37.9	60.0	12	40	50.0	70	12	40	50.0	70
BCV0270LEACE	6YHNF68KE	29.2	172	2	5.28	41.8	70.0	12	46	57.5	80	12	51	63.8	80
BCV0300LEACE	6YJNF84KE	35.5	200	2	5.28	49.7	80.0	12	64	80.0	90	12	72	90.0	90
BCV0400LEACE	6YUNF10ME	48.0	335.2	3	7.92	67.9	110.0	12	64	80.0	125	12	72	90.0	125

Notes:
MCA = Minimum Circuit Ampacity
MOP = Maximum Overcurrent Protection
intelliGen™ and Air Defrost Units do not carry any of the evaporator fan or heater loads.
Power is supplied directly to the evaporators and does not go through the condensing unit.
An evaporator heater hold out relay (option) is recommended when two or more evaporators are connected to a single (BCV) condensing unit to allow termination on coils that have already defrosted to prevent unnecessary steaming. This option is not needed on A0400 intelliGen™ systems wired for a Master / Slave operation.

Mounted Electric Defrost Kits for BCV condensing units include:
Defrost timer, terminal strip, (1) evaporator fan contactor and:
One (1) defrost heater contactor for 1L and 1H codes
Two (2) defrost heater contactors for 2L and 2H codes
Four (4) defrost heater contactors for 4L and 4H codes
Power is supplied to each intelliGen™ evaporator. volt electrical specification.
Each coil terminates its own defrost. Refrigeration will not start until all coils have terminated defrost.

A2L ELECTRICAL DATA

Low Temperature Models - Copeland Discus™ Compressors/575V (cont.)

Please consult AWEF table on page 71 to confirm DOE compliance per model

Model	Compressor	Compressor		Condenser		Air Defrost		Remote Loads: Two Contactors							
								Low Amps "2L"				High Amps "2H"			
								Evap. Fan Amps	Defrost Htrs. Amps	Electric Defrost		Evap. Fan Amps	Defrost Htrs. Amps	Electric Defrost	
		RLA	LRA	No. Fans	FLA (Total)	MCA	MOPD			MCA	MOPD			MCA	MOPD
BCV0120LEACE	4YBNF40KE	15.6	106	2	5.28	24.8	40.0	10	24	34.8	50	10	32	40.0	50
BCV0150LEACE	4YHNF46KE	18.8	113	2	5.28	28.8	45.0	12	26	40.8	50	12	38	47.5	50
BCV0220LEACE	4YJNF59KE	26.1	135	2	5.28	37.9	60.0	12	38	49.9	70	12	43	53.8	70
BCV0270LEACE	6YHNF68KE	29.2	172	2	5.28	41.8	70.0	12	38	53.8	80	12	51	63.8	80
BCV0300LEACE	6YJNF84KE	35.5	200	2	5.28	49.7	80.0	12	48	61.7	90	12	64	80.0	90
BCV0400LEACE	6YUNF10ME	48.0	335.2	3	7.92	67.9	110.0	12	48	79.9	125	12	64	80.0	125

Model	Compressor	Compressor		Condenser		Air Defrost		Remote Loads: One Contactor							
								Low Amps "1L"				High Amps "1H"			
								Evap. Fan Amps	Defrost Htrs. Amps	Electric Defrost		Evap. Fan Amps	Defrost Htrs. Amps	Electric Defrost	
		RLA	LRA	No. Fans	FLA (Total)	MCA	MOPD			MCA	MOPD			MCA	MOPD
BCV0120LEACE	4YBNF40KE	15.6	106	2	5.28	24.8	40.0	10	16	34.8	50	10	24	34.8	50
BCV0150LEACE	4YHNF46KE	18.8	113	2	5.28	28.8	45.0	12	19	40.8	50	12	32	40.8	50
BCV0220LEACE	4YJNF59KE	26.1	135	2	5.28	37.9	60.0	12	32	49.9	70	12	38	49.9	70
BCV0270LEACE	6YHNF68KE	29.2	172	2	5.28	41.8	70.0	12	32	53.8	80	12	38	53.8	80
BCV0300LEACE	6YJNF84KE	35.5	200	2	5.28	49.7	80.0	12	40	61.7	90	12	48	61.7	90
BCV0400LEACE	6YUNF10ME	48.0	335.2	3	7.92	67.9	110.0	12	40	79.9	125	12	48	79.9	125

Notes:
MCA = Minimum Circuit Ampacity
MOP = Maximum Overcurrent Protection
intelliGen™ and Air Defrost Units do not carry any of the evaporator fan or heater loads.
Power is supplied directly to the evaporators and does not go through the condensing unit.
An evaporator heater hold out relay (option) is recommended when two or more evaporators are connected to a single (BCV) condensing unit to allow termination on coils that have already defrosted to prevent unnecessary steaming. This option is not needed on A0400 intelliGen™ systems wired for a Master / Slave operation.

Mounted Electric Defrost Kits for BCV condensing units include:
Defrost timer, terminal strip, (1) evaporator fan contactor and:
One (1) defrost heater contactor for 1L and 1H codes
Two (2) defrost heater contactors for 2L and 2H codes
Four (4) defrost heater contactors for 4L and 4H codes
Power is supplied to each intelliGen™ evaporator. volt electrical specification.
Each coil terminates its own defrost. Refrigeration will not start until all coils have terminated defrost.

A1 ELECTRICAL DATA

Medium Temperature Models - Copeland/208-230V

Please consult AWEF table on page 70 to confirm DOE compliance per model

Model	Compressor	Compressor		Condenser		Air Defrost		Remote Loads: Four Contactors							
								Low Amps "4L"				High Amps "4H"			
		RLA	LRA	No. Fans	FLA (Total)	MCA	MOPD	Evap. Fan Amps	Defrost Htrs. Amps	Electric Defrost MCA	Electric Defrost MOPD	Evap. Fan Amps	Defrost Htrs. Amps	Electric Defrost MCA	Electric Defrost MOPD
BCV0150M\ACD	3DS3R17ME	53.5	275.0	2	7	73.9	125	25	96	120.0	150	25	108	135.0	150
BCV0200M\ACD	4DBNR20ME	64.7	374.0	2	7	87.9	150	25	96	120.0	175	25	108	135.0	175
BCV0250M\ACD	4DHNR22ME	66.8	428.0	2	7	90.5	150	25	125	156.3	175	30	181	226.3	250
BCV0260M\ACD	4DHNR22ME	66.8	428.0	2	13.2	96.7	150	25	125	156.3	175	30	181	226.3	250
BCV0300M\ACD	4DJNR28ME	94.6	470.0	2	13.2	131.5	225	30	149	186.3	250	30	181	226.3	250
BCV0350M\ACD	6DHNR35ME	112.3	565.0	3	19.8	160.2	250	35	160	200.0	300	35	192	240.0	300
BCV0400M*ACD	6DJNR40ME	128.2	594.0	3	19.8	180.1	300	35	160	216.3	300	35	192	240.0	300

Model	Compressor	Compressor		Condenser		Air Defrost		Remote Loads: Three Contactors							
								Low Amps "3L"				High Amps "3H"			
		RLA	LRA	No. Fans	FLA (Total)	MCA	MOPD	Evap. Fan Amps	Defrost Htrs. Amps	Electric Defrost MCA	Electric Defrost MOPD	Evap. Fan Amps	Defrost Htrs. Amps	Electric Defrost MCA	Electric Defrost MOPD
BCV0150M\ACD	3DS3R17ME	53.5	275.0	2	7	73.9	125	25	96	120.0	150	25	96	120.0	150
BCV0200M\ACD	4DBNR20ME	64.7	374.0	2	7	87.9	150	22	96	120.0	150	25	96	120.0	175
BCV0250M\ACD	4DHNR22ME	66.8	428.0	2	7	90.5	150	20	96	120.0	175	25	120	150.0	175
BCV0260M\ACD	4DHNR22ME	66.8	428.0	2	13.2	96.7	150	20	96	120.0	175	25	96	122.5	175
BCV0300M\ACD	4DJNR28ME	94.6	470.0	2	13.2	131.5	225	25	125	157.3	250	20	125	156.3	225
BCV0350M\ACD	6DHNR35ME	112.3	565.0	3	19.8	160.2	250	30	130	190.2	300	35	144	195.2	300
BCV0400M*ACD	6DJNR40ME	128.2	594.0	3	19.8	180.1	300	30	130	210.1	300	30	144	210.1	300

Notes:
Λ C =208-230/3/60
* K = 230/3/60
MCA = Minimum Circuit Ampacity
MOP = Maximum Overcurrent Protection
intelliGen™ and Air Defrost Units do not carry any of the evaporator fan or heater loads.
Power is supplied directly to the evaporators and does not go through the condensing unit.
An evaporator heater hold out relay (option) is recommended when two or more evaporators are connected to a single (BCV) condensing unit to allow termination on coils that have already defrosted to prevent unnecessary steaming. This option is not needed on A0400 intelliGen™ systems wired for a Master / Slave operation.

Mounted Electric Defrost Kits for BCV condensing units include:
Defrost timer, terminal strip, (1) evaporator fan contactor and:
One (1) defrost heater contactor for 1L and 1H codes
Two (2) defrost heater contactors for 2L and 2H codes
Four (4) defrost heater contactors for 4L and 4H codes
Power is supplied to each intelliGen™ evaporator. volt electrical specification.
Each coil terminates its own defrost. Refrigeration will not start until all coils have terminated defrost.

A1 ELECTRICAL DATA

Medium Temperature Models - Copeland/208-230V (cont.)

Please consult AWEF table on page 70 to confirm DOE compliance per model

Model	Compressor	Compressor		Condenser		Air Defrost		Remote Loads: Two Contactors							
								Low Amps "2L"				High Amps "2H"			
		RLA	LRA	No. Fans	FLA (Total)	MCA	MOPD	Evap. Fan Amps	Defrost Htrs. Amps	Electric Defrost MCA	Electric Defrost MOPD	Evap. Fan Amps	Defrost Htrs. Amps	Electric Defrost MCA	Electric Defrost MOPD
BCV0150MCACE	3YS3R16ME	53.5	275	2	7.0	73.9	125	25	80	100	200	25	96	120	200
BCV0200MCACE	4YBNR19ME	64.7	374	2	7.0	87.9	150	20	80	108	225	20	96	120	225
BCV0250MCACE	4YHNR22ME	66.8	428	2	13.2	96.7	150	—	—	—	—	—	—	—	—
BCV0260MCACE	4YHNR22ME	66.8	428	2	13.2	96.7	150	—	—	—	—	—	—	—	—
BCV0300MCACE	4YJNR27ME	94.6	470	2	13.2	131.5	225	—	—	—	—	—	—	—	—
BCV0350MCACE	6YHNR32ME	112.3	565	3	10.5	150.9	250	—	—	—	—	—	—	—	—
BCV0400MCACE	6YJNR39ME	128.2	594	3	19.8	180.1	300	—	—	—	—	—	—	—	—

Notes:

Λ C =208-230/3/60
* K = 230/3/60
MCA = Minimum Circuit Ampacity
MOP = Maximum Overcurrent Protection
intelliGen™ and Air Defrost Units do not carry any of the evaporator fan or heater loads.
Power is supplied directly to the evaporators and does not go through the condensing unit.
An evaporator heater hold out relay (option) is recommended when two or more evaporators are connected to a single (BCV) condensing unit to allow termination on coils that have already defrosted to prevent unnecessary steaming. This option is not needed on A0400 intelliGen™ systems wired for a Master / Slave operation.

Mounted Electric Defrost Kits for BCV condensing units include:
Defrost timer, terminal strip, (1) evaporator fan contactor and:
One (1) defrost heater contactor for 1L and 1H codes
Two (2) defrost heater contactors for 2L and 2H codes
Four (4) defrost heater contactors for 4L and 4H codes
Power is supplied to each intelliGen™ evaporator. volt electrical specification.
Each coil terminates its own defrost. Refrigeration will not start until all coils have terminated defrost.

A1 ELECTRICAL DATA

Medium Temperature Models - Copeland/460V

Please consult AWEF table on page 70 to confirm DOE compliance per model

Model	Compressor	Compressor		Condenser		Air Defrost		Remote Loads: Four Contactors							
								Low Amps "4L"				High Amps "4H"			
		RLA	LRA	No. Fans	FLA (Total)	MCA	MOPD	Evap. Fan Amps	Defrost Htrs. Amps	Electric Defrost MCA	Electric Defrost MOPD	Evap. Fan Amps	Defrost Htrs. Amps	Electric Defrost MCA	Electric Defrost MOPD
BCV0150M/ACD	3DS3R17ME	26.0	138.0	2	3.4	35.9	60	15	48	60.0	70	15	64	80.0	80
BCV0200M/ACD	4DBNR20ME	32.4	187.0	2	3.4	43.9	70	15	48	60.0	90	15	64	80.0	90
BCV0250M/ACD	4DHNR22ME	33.4	214.0	2	3.4	45.1	70	20	64	80.0	90	20	96	120.0	125
BCV0260M/ACD	4DHNR22ME	33.4	214.0	2	6.6	48.3	80	20	64	80.0	100	20	96	120.0	125
BCV0300M/ACD	4DJNR28ME	47.3	235.0	2	6.6	65.7	110	20	64	86.1	125	20	96	120.0	125
BCV0350M/ACD	6DHNR35ME	56.2	283.0	3	9.9	80.1	125	20	64	100.7	150	20	96	120.0	150
BCV0400M/ACD	6DJNR40ME	64.1	297.0	3	9.9	90.0	150	20	64	110.6	150	20	96	120.0	150
BCV0500MDACD	6DUNR49ME	75.0	482.0	4	6.8	100.6	175	20	64	120.6	175	20	96	120.6	175

Model	Compressor	Compressor		Condenser		Air Defrost		Remote Loads: Three Contactors							
								Low Amps "3L"				High Amps "3H"			
		RLA	LRA	No. Fans	FLA (Total)	MCA	MOPD	Evap. Fan Amps	Defrost Htrs. Amps	Electric Defrost MCA	Electric Defrost MOPD	Evap. Fan Amps	Defrost Htrs. Amps	Electric Defrost MCA	Electric Defrost MOPD
BCV0150M/ACD	3DS3R17ME	26.0	138.0	2	3.4	35.9	60	15	48	60.0	70	15	64	80.0	80
BCV0200M/ACD	4DBNR20ME	32.4	187.0	2	3.4	43.9	70	15	64	80.0	90	15	64	80.0	90
BCV0250M/ACD	4DHNR22ME	33.4	214.0	2	3.4	45.1	70	15	64	80.0	90	20	64	80.0	90
BCV0260M/ACD	4DHNR22ME	33.4	214.0	2	6.6	48.3	80	15	64	80.0	90	20	64	80.0	100
BCV0300M/ACD	4DJNR28ME	47.3	235.0	2	6.6	65.7	110	20	64	86.1	125	20	64	86.1	125
BCV0350M/ACD	6DHNR35ME	56.2	283.0	3	9.9	80.1	125	20	64	100.7	150	20	96	120.0	150
BCV0400M/ACD	6DJNR40ME	64.1	297.0	3	9.9	90.0	150	20	64	110.6	150	22	64	112.6	175
BCV0500MDACD	6DUNR49ME	75.0	482.0	4	6.8	100.6	175	20	64	120.6	175	22	64	122.6	175

Notes:

Λ D = 460/3/60
MCA = Minimum Circuit Ampacity
MOP = Maximum Overcurrent Protection
intelliGen™ and Air Defrost Units do not carry any of the evaporator fan or heater loads.
Power is supplied directly to the evaporators and does not go through the condensing unit.
An evaporator heater hold out relay (option) is recommended when two or more evaporators are connected to a single (BCV) condensing unit to allow termination on coils that have already defrosted to prevent unnecessary steaming. This option is not needed on A0400 intelliGen™ systems wired for a Master / Slave operation.

Mounted Electric Defrost Kits for BCV condensing units include:
Defrost timer, terminal strip, (1) evaporator fan contactor and:
One (1) defrost heater contactor for 1L and 1H codes
Two (2) defrost heater contactors for 2L and 2H codes
Four (4) defrost heater contactors for 4L and 4H codes
Power is supplied to each intelliGen™ evaporator. volt electrical specification.
Each coil terminates its own defrost. Refrigeration will not start until all coils have terminated defrost.

A1 ELECTRICAL DATA

Medium Temperature Models - Copeland/460V (cont.)

Please consult AWEF table on page 70 to confirm DOE compliance per model

Model	Compressor	Compressor		Condenser		Air Defrost		Remote Loads: Two Contactors							
								Low Amps "2L"				High Amps "2H"			
		RLA	LRA	No. Fans	FLA (Total)	MCA	MOPD	Evap. Fan Amps	De-frost Htrs. Amps	Electric Defrost MCA	Electric Defrost MOPD	Evap. Fan Amps	Defrost Htrs. Amps	Electric Defrost MCA	Electric Defrost MOPD
BCV0150M∧ACD	3DS3R17ME	26.0	138.0	2	3.4	35.9	60	15	48	60.0	70	15	64	80.0	80
BCV0200M∧ACD	4DBNR20ME	32.4	187.0	2	3.4	43.9	70	15	48	60.0	90	15	64	80.0	90
BCV0250M∧ACD	4DHNR22ME	33.4	214.0	2	3.4	45.1	70	15	48	60.1	90	15	80	100.0	100
BCV0260M∧ACD	4DHNR22ME	33.4	214.0	2	6.6	48.3	80	15	48	63.7	90	15	80	100.0	100
BCV0300M∧ACD	4DJNR28ME	47.3	235.0	2	6.6	65.7	110	15	80	100.0	125	20	96	120.0	125
BCV0350M∧ACD	6DHNR35ME	56.2	283.0	3	9.9	80.1	125	20	80	100.7	150	20	96	120.0	150
BCV0400M∧ACD	6DJNR40ME	64.1	297.0	3	9.9	90.0	150	20	80	110.6	150	20	96	120.0	150
BCV0500MDACD	6DUNR49ME	75.0	482.0	4	6.8	100.6	175	20	80	120.6	175	20	96	120.6	175

Model	Compressor	Compressor		Condenser		Air Defrost		Remote Loads: One Contactors							
								Low Amps "1L"				High Amps "1H"			
		RLA	LRA	No. Fans	FLA (Total)	MCA	MOPD	Evap. Fan Amps	De-frost Htrs. Amps	Electric Defrost MCA	Electric Defrost MOPD	Evap. Fan Amps	Defrost Htrs. Amps	Electric Defrost MCA	Electric Defrost MOPD
BCV0150M∧ACD	3DS3R17ME	26.0	138.0	2	3.4	35.9	60	15	40	50.9	70	15	48	60.0	70
BCV0200M∧ACD	4DBNR20ME	32.4	187.0	2	3.4	43.9	70	15	40	58.9	90	15	48	60.0	90
BCV0250M∧ACD	4DHNR22ME	33.4	214.0	2	3.4	45.1	70	-	-	-	-	-	-	-	-
BCV0260M∧ACD	4DHNR22ME	33.4	214.0	2	6.6	48.3	80	-	-	-	-	-	-	-	-
BCV0300M∧ACD	4DJNR28ME	47.3	235.0	2	6.6	65.7	110	-	-	-	-	-	-	-	-
BCV0350M∧ACD	6DHNR35ME	56.2	283.0	3	9.9	80.1	125	-	-	-	-	-	-	-	-
BCV0400M∧ACD	6DJNR40ME	64.1	297.0	3	9.9	90.0	150	-	-	-	-	-	-	-	-
BCV0500MDACD	6DUNR49ME	75.0	482.0	4	6.8	100.6	175	-	-	-	-	-	-	-	-

Notes:

∧ D = 460/3/60
MCA = Minimum Circuit Ampacity
MOP = Maximum Overcurrent Protection
intelliGen™ and Air Defrost Units do not carry any of the evaporator fan or heater loads.
Power is supplied directly to the evaporators and does not go through the condensing unit.
An evaporator heater hold out relay (option) is recommended when two or more evaporators are connected to a single (BCV) condensing unit to allow termination on coils that have already defrosted to prevent unnecessary steaming. This option is not needed on A0400 intelliGen™ systems wired for a Master / Slave operation.

Mounted Electric Defrost Kits for BCV condensing units include:
Defrost timer, terminal strip, (1) evaporator fan contactor and:
One (1) defrost heater contactor for 1L and 1H codes
Two (2) defrost heater contactors for 2L and 2H codes
Four (4) defrost heater contactors for 4L and 4H codes
Power is supplied to each intelliGen™ evaporator. volt electrical specification.
Each coil terminates its own defrost. Refrigeration will not start until all coils have terminated defrost.

A1 ELECTRICAL DATA

Medium Temperature Models - Copeland/575V

Please consult AWEF table on page 71 to confirm DOE compliance per model

Model	Compressor	Compressor		Condenser		Air Defrost		Remote Loads: Four Contactors							
								Low Amps "4L"				High Amps "4H"			
								Evap. Fan Amps	Defrost Htrs. Amps	Electric Defrost		Evap. Fan Amps	Defrost Htrs. Amps	Electric Defrost	
		RLA	LRA	No. Fans	FLA (Total)	MCA	MOPD			MCA	MOPD			MCA	MOPD
BCV0150MEACD	3DS3R17ME	21.2	110	2	2.7	29.2	50	12	40	50.0	60	12	51	63.8	70
BCV0200MEACD	4DBNR20ME	28.2	135	2	5.6	40.9	60	12	44	55.0	80	12	51	63.8	80
BCV0250MEACD	4DHNR22ME	29.9	172	2	5.6	42.9	70	16	51	63.8	80	16	71	88.8	90
BCV0260MEACD	4DHNR22ME	29.9	172	2	5.3	42.6	70	16	64	80.0	80	16	71	88.8	90
BCV0300MEACD	4DJNR28ME	39.6	200	2	5.6	55.1	90	16	64	80.0	110	16	77	96.3	110
BCV0350MEACD	6DHNR35ME	36.5	230	3	7.9	53.6	90	16	64	80.0	100	16	77	96.3	100
BCV0400MEACD	6DJNR40ME	46.2	245	3	7.9	65.6	110	16	64	81.6	125	16	77	96.3	125
BCV0500MEACD	6DUNR49ME	56.2	335.2	4	5.5	75.6	125	16	64	91.6	125	16	77	96.3	125

Model	Compressor	Compressor		Condenser		Air Defrost		Remote Loads: Three Contactors							
								Low Amps "3L"				High Amps "3H"			
								Evap. Fan Amps	Defrost Htrs. Amps	Electric Defrost		Evap. Fan Amps	Defrost Htrs. Amps	Electric Defrost	
		RLA	LRA	No. Fans	FLA (Total)	MCA	MOPD			MCA	MOPD			MCA	MOPD
BCV0150MEACD	3DS3R17ME	21.2	110	2	3.4	29.8	50	12	40	50.0	60	12	51	63.8	70
BCV0200MEACD	4DBNR20ME	28.2	135	2	5.6	40.9	60	12	42	52.9	80	12	51	63.8	80
BCV0250MEACD	4DHNR22ME	29.9	172	2	5.6	42.9	70	12	60	75.0	80	12	64	80.0	80
BCV0260MEACD	4DHNR22ME	29.9	172	2	6.6	43.9	70	12	64	80.0	80	12	64	80.0	80
BCV0300MEACD	4DJNR28ME	39.6	200	2	5.6	55.1	90	16	64	80.0	110	16	77	96.3	110
BCV0350MEACD	6DHNR35ME	36.5	230	3	9.9	55.6	90	16	64	80.0	100	16	77	96.3	100
BCV0400MEACD	6DJNR40ME	46.2	245	3	9.9	67.6	110	16	64	83.6	125	16	77	96.3	125
BCV0500MEACD	6DUNR49ME	56.2	335.2	4	5.5	75.6	125	16	64	91.6	125	16	77	96.3	125

Notes:
MCA = Minimum Circuit Ampacity
MOP = Maximum Overcurrent Protection
intelliGen™ and Air Defrost Units do not carry any of the evaporator fan or heater loads.
Power is supplied directly to the evaporators and does not go through the condensing unit.
An evaporator heater hold out relay (option) is recommended when two or more evaporators are connected to a single (BCV) condensing unit to allow termination on coils that have already defrosted to prevent unnecessary steaming. This option is not needed on A0400 intelliGen™ systems wired for a Master / Slave operation.

Mounted Electric Defrost Kits for BCV condensing units include:
Defrost timer, terminal strip, (1) evaporator fan contactor and:
One (1) defrost heater contactor for 1L and 1H codes
Two (2) defrost heater contactors for 2L and 2H codes
Four (4) defrost heater contactors for 4L and 4H codes
Power is supplied to each intelliGen™ evaporator. volt electrical specification.
Each coil terminates its own defrost. Refrigeration will not start until all coils have terminated defrost.

A1 ELECTRICAL DATA

Medium Temperature Models - Copeland/575V (cont.)

Please consult AWEF table on page 71 to confirm DOE compliance per model

Model	Compressor	Compressor		Condenser		Air Defrost		Remote Loads: Two Contactors							
								Low Amps "2L"				High Amps "2H"			
		RLA	LRA	No. Fans	FLA (Total)	MCA	MOPD	Evap. Fan Amps	Defrost Htrs. Amps	Electric Defrost MCA	Electric Defrost MOPD	Evap. Fan Amps	Defrost Htrs. Amps	Electric Defrost MCA	Electric Defrost MOPD
BCV0150MEACD	3DS3R17ME	21.2	110	2	2.7	29.2	50	12	38	47.5	60	12	42	52.5	60
BCV0200MEACD	4DBNR20ME	28.2	135	2	3.4	40.9	60	12	38	52.9	80	12	42	52.9	80
BCV0250MEACD	4DHNR22ME	29.9	172	2	3.4	42.9	70	12	38	54.9	80	12	64	80.0	80
BCV0260MEACD	4DHNR22ME	29.9	172	2	5.3	42.6	70	12	48	60.0	80	12	64	80.0	80
BCV0300MEACD	4DJNR28ME	39.6	200	2	6.6	55.1	90	12	48	67.1	100	16	77	96.3	110
BCV0350MEACD	6DHNR35ME	36.5	230	3	7.9	53.6	90	16	48	69.6	100	16	77	96.3	100
BCV0400MEACD	6DJNR40ME	46.2	245	3	7.9	65.6	110	16	48	81.6	125	16	77	96.3	125
BCV0500MEACD	6DUNR49ME	56.2	335.2	4	5.5	75.6	125	16	48	91.6	125	16	77	96.3	125

Model	Compressor	Compressor		Condenser		Air Defrost		Remote Loads: One Contactor							
								Low Amps "1L"				High Amps "1H"			
		RLA	LRA	No. Fans	FLA (Total)	MCA	MOPD	Evap. Fan Amps	Defrost Htrs. Amps	Electric Defrost MCA	Electric Defrost MOPD	Evap. Fan Amps	Defrost Htrs. Amps	Electric Defrost MCA	Electric Defrost MOPD
BCV0150MEACD	3DS3R17ME	21.2	110	2	2.7	29.2	50	12	32	41.2	60	12	38	47.5	60
BCV0200MEACD	4DBNR20ME	28.2	135	2	3.4	40.9	60	12	32	52.9	80	12	38	52.9	80
BCV0250MEACD	4DHNR22ME	29.9	172	2	3.4	42.9	70	-	-	-	-	-	-	-	-
BCV0260MEACD	4DHNR22ME	29.9	172	2	5.3	42.6	70	-	-	-	-	-	-	-	-
BCV0300MEACD	4DJNR28ME	39.6	200	2	6.6	55.1	90	-	-	-	-	-	-	-	-
BCV0350MEACD	6DHNR35ME	36.5	230	3	7.9	53.6	90	-	-	-	-	-	-	-	-
BCV0400MEACD	6DJNR40ME	46.2	245	3	7.9	65.6	110	-	-	-	-	-	-	-	-
BCV0500MEACD	6DUNR49ME	56.2	335.2	4	5.5	75.6	125	-	-	-	-	-	-	-	-

Notes:
MCA = Minimum Circuit Ampacity
MOP = Maximum Overcurrent Protection
intelliGen™ and Air Defrost Units do not carry any of the evaporator fan or heater loads.
Power is supplied directly to the evaporators and does not go through the condensing unit.
An evaporator heater hold out relay (option) is recommended when two or more evaporators are connected to a single (BCV) condensing unit to allow termination on coils that have already defrosted to prevent unnecessary steaming. This option is not needed on A0400 intelliGen™ systems wired for a Master / Slave operation.

Mounted Electric Defrost Kits for BCV condensing units include:
Defrost timer, terminal strip, (1) evaporator fan contactor and:
One (1) defrost heater contactor for 1L and 1H codes
Two (2) defrost heater contactors for 2L and 2H codes
Four (4) defrost heater contactors for 4L and 4H codes
Power is supplied to each intelliGen™ evaporator. volt electrical specification.
Each coil terminates its own defrost. Refrigeration will not start until all coils have terminated defrost.

A1 ELECTRICAL DATA

Medium Temperature High Efficiency Models - Copeland 208-230V

Please consult AWEF table on page 70 to confirm DOE compliance per model

Model	Compressor	Compressor		Condenser		Air Defrost		Remote Loads: Four Contactors							
								Low Amps "4L"				High Amps "4H"			
		RLA	LRA	No. Fans	FLA (Total)	MCA	MOPD	Evap. Fan Amps	Defrost Htrs. Amps	Electric Defrost MCA	Electric Defrost MOPD	Evap. Fan Amps	Defrost Htrs. Amps	Electric Defrost MCA	Electric Defrost MOPD
BCV0151M∧ACD	3DS3R17ME	53.5	275.0	2	7	73.9	125	25	96	120.0	150	25	108	135.0	150
BCV0201M∧ACD	4DBNR20ME	64.7	374.0	2	14	94.9	150	25	96	120.0	175	25	108	135.0	175
BCV0251M∧ACD	4DHNR22ME	66.8	428.0	3	10.5	94.0	150	25	125	156.3	175	30	181	226.3	250
BCV0301M∧ACD	4DJNR28ME	94.6	470.0	3	21	139.3	225	30	149	186.3	250	30	181	226.3	250
BCV0351M∧ACD	6DHNR35ME	112.3	565.0	4	14	154.4	250	35	160	200.0	300	35	192	240.0	300
BCV0401M*ACD	6DJNR40ME	128.2	594.0	4	28	188.3	300	35	160	223.3	350	35	192	240.0	350

Model	Compressor	Compressor		Condenser		Air Defrost		Remote Loads: Three Contactors							
								Low Amps "3L"				High Amps "3H"			
		RLA	LRA	No. Fans	FLA (Total)	MCA	MOPD	Evap. Fan Amps	Defrost Htrs. Amps	Electric Defrost MCA	Electric Defrost MOPD	Evap. Fan Amps	Defrost Htrs. Amps	Electric Defrost MCA	Electric Defrost MOPD
BCV0151M∧ACD	3DS3R17ME	53.5	275.0	2	7	73.9	125	25	80	100.0	150	25	64	98.9	150
BCV0201M∧ACD	4DBNR20ME	64.7	374.0	2	14	94.9	150	20	96	120.0	175	20	96	120.0	175
BCV0251M∧ACD	4DHNR22ME	66.8	428.0	3	10.5	94.0	150	20	96	120.0	175	25	120	150.0	175
BCV0301M∧ACD	4DJNR28ME	94.6	470.0	3	21	139.3	225	25	125	164.3	250	25	125	164.3	250
BCV0351M∧ACD	6DHNR35ME	112.3	565.0	4	14	154.4	250	30	130	184.4	250	35	144	189.4	300
BCV0401M*ACD	6DJNR40ME	128.2	594.0	4	28	188.3	300	30	130	218.3	300	35	144	223.3	350

Notes:
∧ C = 208-230/3/60
* K = 230/3/60
MCA = Minimum Circuit Ampacity
MOP = Maximum Overcurrent Protection
intelliGen™ and Air Defrost Units do not carry any of the evaporator fan or heater loads.
Power is supplied directly to the evaporators and does not go through the condensing unit.
An evaporator heater hold out relay (option) is recommended when two or more evaporators are connected to a single (BCV) condensing unit to allow termination on coils that have already defrosted to prevent unnecessary steaming. This option is not needed on A0400 intelliGen™ systems wired for a Master / Slave operation.

Mounted Electric Defrost Kits for BCV condensing units include:
Defrost timer, terminal strip, (1) evaporator fan contactor and:
One (1) defrost heater contactor for 1L and 1H codes
Two (2) defrost heater contactors for 2L and 2H codes
Four (4) defrost heater contactors for 4L and 4H codes
Power is supplied to each intelliGen™ evaporator. volt electrical specification.
Each coil terminates its own defrost. Refrigeration will not start until all coils have terminated defrost.

A1 ELECTRICAL DATA

Medium Temperature High Efficiency Models - Copeland 208-230V (cont.)

Please consult AWEF table on page 70 to confirm DOE compliance per model

								Remote Loads: Two Contactors							
								Low Amps "2L"				High Amps "2H"			
Model	Compressor	Compressor		Condenser		Air Defrost		Evap. Fan Amps	Defrost Htrs. Amps	Electric Defrost		Evap. Fan Amps	Defrost Htrs. Amps	Electric Defrost	
		RLA	LRA	No. Fans	FLA (Total)	MCA	MOPD			MCA	MOPD			MCA	MOPD
BCV0151M∧ACD	3DS3R17ME	53.5	275.0	2	7	73.9	125	25	80	100.0	150	25	96	120.0	150
BCV0201M∧ACD	4DBNR20ME	64.7	374.0	2	14	94.9	150	20	80	114.9	175	20	96	120.0	175
BCV0251M∧ACD	4DHNR22ME	66.8	428.0	3	10.5	94.0	150	-	-	-	-	-	-	-	-
BCV0301M∧ACD	4DJNR28ME	94.6	470.0	3	21	139.3	225	-	-	-	-	-	-	-	-
BCV0351M∧ACD	6DHNR35ME	112.3	565.0	4	14	154.4	250	-	-	-	-	-	-	-	-
BCV0401M*ACD	6DJNR40ME	128.2	594.0	4	28	188.3	300	-	-	-	-	-	-	-	-

Notes:

∧ C = 208-230/3/60
* K = 230/3/60
MCA = Minimum Circuit Ampacity
MOP = Maximum Overcurrent Protection
intelliGen™ and Air Defrost Units do not carry any of the evaporator fan or heater loads.
Power is supplied directly to the evaporators and does not go through the condensing unit.
An evaporator heater hold out relay (option) is recommended when two or more evaporators are connected to a single (BCV) condensing unit to allow termination on coils that have already defrosted to prevent unnecessary steaming. This option is not needed on A0400 intelliGen™ systems wired for a Master / Slave operation.

Mounted Electric Defrost Kits for BCV condensing units include:
Defrost timer, terminal strip, (1) evaporator fan contactor and:
One (1) defrost heater contactor for 1L and 1H codes
Two (2) defrost heater contactors for 2L and 2H codes
Four (4) defrost heater contactors for 4L and 4H codes
Power is supplied to each intelliGen™ evaporator. volt electrical specification.
Each coil terminates its own defrost. Refrigeration will not start until all coils have terminated defrost.

A1 ELECTRICAL DATA

Medium Temperature High Efficiency Models - Copeland 460V

Please consult AWEF table on page 70 to confirm DOE compliance per model

Model	Compressor	Compressor		Condenser		Air Defrost		Remote Loads: Four Contactors							
								Low Amps "4L"				High Amps "4H"			
		RLA	LRA	No. Fans	FLA (Total)	MCA	MOPD	Evap. Fan Amps	Defrost Htrs. Amps	Electric Defrost MCA	Electric Defrost MOPD	Evap. Fan Amps	Defrost Htrs. Amps	Electric Defrost MCA	Electric Defrost MOPD
BCV0151M∧ACD	3DS3R17ME	26.0	138.0	2	3.4	35.9	60	15	48	60.0	70	15	64	80.0	80
BCV0201M∧ACD	4DBNR20ME	32.4	187.0	2	7	47.5	70	15	48	62.5	90	15	64	80.0	90
BCV0251M∧ACD	4DHNR22ME	33.4	214.0	3	5.1	46.8	80	20	64	80.0	100	20	96	120.0	125
BCV0301M∧ACD	4DJNR28ME	47.3	235.0	3	10.5	69.6	110	20	64	89.6	125	20	96	120.0	125
BCV0351M∧ACD	6DHNR35ME	56.2	283.0	4	6.8	77.0	125	20	64	97.0	150	20	96	120.0	150
BCV0401M∧ACD	6DJNR40ME	64.1	297.0	4	14	94.1	150	20	64	114.1	175	20	96	120.0	175

Model	Compressor	Compressor		Condenser		Air Defrost		Remote Loads: Three Contactors							
								Low Amps "3L"				High Amps "3H"			
		RLA	LRA	No. Fans	FLA (Total)	MCA	MOPD	Evap. Fan Amps	Defrost Htrs. Amps	Electric Defrost MCA	Electric Defrost MOPD	Evap. Fan Amps	Defrost Htrs. Amps	Electric Defrost MCA	Electric Defrost MOPD
BCV0151M∧ACD	3DS3R17ME	26.0	138.0	2	3.4	35.9	60	15	48	60.0	70	15	64	80.0	80
BCV0201M∧ACD	4DBNR20ME	32.4	187.0	2	7	47.5	70	15	48	62.5	90	15	64	80.0	90
BCV0251M∧ACD	4DHNR22ME	33.4	214.0	3	5.1	46.8	80	15	64	80.0	90	20	80	100.0	100
BCV0301M∧ACD	4DJNR28ME	47.3	235.0	3	10.5	69.6	110	20	80	100.0	125	20	80	100.0	125
BCV0351M∧ACD	6DHNR35ME	56.2	283.0	4	6.8	77.0	125	20	64	97.0	150	20	96	120.0	150
BCV0401M∧ACD	6DJNR40ME	64.1	297.0	4	14	94.1	150	20	80	114.1	175	20	80	114.1	175

Notes:

∧ D = 460/3/60
MCA = Minimum Circuit Ampacity
MOP = Maximum Overcurrent Protection
intelliGen™ and Air Defrost Units do not carry any of the evaporator fan or heater loads.
Power is supplied directly to the evaporators and does not go through the condensing unit.
An evaporator heater hold out relay (option) is recommended when two or more evaporators are connected to a single (BCV) condensing unit to allow termination on coils that have already defrosted to prevent unnecessary steaming. This option is not needed on A0400 intelliGen™ systems wired for a Master / Slave operation.

Mounted Electric Defrost Kits for BCV condensing units include:
Defrost timer, terminal strip, (1) evaporator fan contactor and:
One (1) defrost heater contactor for 1L and 1H codes
Two (2) defrost heater contactors for 2L and 2H codes
Four (4) defrost heater contactors for 4L and 4H codes
Power is supplied to each intelliGen™ evaporator. volt electrical specification.
Each coil terminates its own defrost. Refrigeration will not start until all coils have terminated defrost.

A1 ELECTRICAL DATA

Medium Temperature High Efficiency Models - Copeland 460V (cont.)

Please consult AWEF table on page 70 to confirm DOE compliance per model

Model	Compressor	Compressor		Condenser		Air Defrost		Remote Loads: Two Contactors							
								Low Amps "2L"				High Amps "2H"			
		RLA	LRA	No. Fans	FLA (Total)	MCA	MOPD	Evap. Fan Amps	Defrost Htrs. Amps	Electric Defrost MCA	Electric Defrost MOPD	Evap. Fan Amps	Defrost Htrs. Amps	Electric Defrost MCA	Electric Defrost MOPD
BCV0151M∧ACD	3DS3R17ME	26.0	138.0	2	3.4	35.9	60	15	48	60.0	70	15	64	80.0	80
BCV0201M∧ACD	4DBNR20ME	32.4	187.0	2	7	47.5	70	15	48	62.5	90	15	64	80.0	90
BCV0251M∧ACD	4DHNR22ME	33.4	214.0	3	5.1	46.8	80	15	48	61.8	90	15	80	100.0	100
BCV0301M∧ACD	4DJNR28ME	47.3	235.0	3	10.5	69.6	110	15	80	100.0	125	20	96	120.0	125
BCV0351M∧ACD	6DHNR35ME	56.2	283.0	4	6.8	77.0	125	20	80	100.0	150	20	96	120.0	150
BCV0401M∧ACD	6DJNR40ME	64.1	297.0	4	14	94.1	150	20	80	114.1	175	20	96	120.0	175

Model	Compressor	Compressor		Condenser		Air Defrost		Remote Loads: One Contactor							
								Low Amps "1L"				High Amps "1H"			
		RLA	LRA	No. Fans	FLA (Total)	MCA	MOPD	Evap. Fan Amps	Defrost Htrs. Amps	Electric Defrost MCA	Electric Defrost MOPD	Evap. Fan Amps	Defrost Htrs. Amps	Electric Defrost MCA	Electric Defrost MOPD
BCV0151M∧ACD	3DS3R17ME	26.0	138.0	2	3.4	35.9	60	15	40	50.9	70	15	48	60.0	70
BCV0201M∧ACD	4DBNR20ME	32.4	187.0	2	7	47.5	70	15	40	62.5	90	15	48	62.5	90
BCV0251M∧ACD	4DHNR22ME	33.4	214.0	3	5.1	46.8	80	-	-	-	-	-	-	-	-
BCV0301M∧ACD	4DJNR28ME	47.3	235.0	3	10.5	69.6	110	-	-	-	-	-	-	-	-
BCV0351M∧ACD	6DHNR35ME	56.2	283.0	4	6.8	77.0	125	-	-	-	-	-	-	-	-
BCV0401M∧ACD	6DJNR40ME	64.1	297.0	4	14	94.1	150	-	-	-	-	-	-	-	-

Notes:

∧ D = 460/3/60
MCA = Minimum Circuit Ampacity
MOP = Maximum Overcurrent Protection
intelliGen™ and Air Defrost Units do not carry any of the evaporator fan or heater loads.
Power is supplied directly to the evaporators and does not go through the condensing unit.
An evaporator heater hold out relay (option) is recommended when two or more evaporators are connected to a single (BCV) condensing unit to allow termination on coils that have already defrosted to prevent unnecessary steaming. This option is not needed on A0400 intelliGen™ systems wired for a Master / Slave operation.

Mounted Electric Defrost Kits for BCV condensing units include:
Defrost timer, terminal strip, (1) evaporator fan contactor and:
One (1) defrost heater contactor for 1L and 1H codes
Two (2) defrost heater contactors for 2L and 2H codes
Four (4) defrost heater contactors for 4L and 4H codes
Power is supplied to each intelliGen™ evaporator. volt electrical specification.
Each coil terminates its own defrost. Refrigeration will not start until all coils have terminated defrost.

A1 ELECTRICAL DATA

Medium Temperature High Efficiency Models - Copeland 575V

Please consult AWEF table on page 71 to confirm DOE compliance per model

Model	Compressor	Compressor		Condenser		Air Defrost		Remote Loads: Four Contactors							
								Low Amps "4L"				High Amps "4H"			
								Evap. Fan Amps	Defrost Htrs. Amps	Electric Defrost		Evap. Fan Amps	Defrost Htrs. Amps	Electric Defrost	
		RLA	LRA	No. Fans	FLA (Total)	MCA	MOPD			MCA	MOPD			MCA	MOPD
BCV0151MEACD	3DS3R17ME	21.2	110	2	2.7	29.2	50	12	40	50.0	60	12	51	63.8	70
BCV0201MEACD	4DBNR20ME	28.2	135	2	5.6	40.9	60	12	44	55.0	80	12	51	63.8	80
BCV0251MEACD	4DHNR22ME	29.9	172	3	4.1	41.4	70	16	51	63.8	80	16	71	88.8	90
BCV0301MEACD	4DJNR28ME	39.6	200	3	8.4	57.9	90	16	64	80.0	110	16	77	96.3	110
BCV0351MEACD	6DHNR35ME	36.5	230	4	11.2	56.9	90	16	64	80.0	100	16	77	96.3	100
BCV0401MEACD	6DJNR40ME	46.2	245	4	11.2	68.9	110	16	64	84.9	125	16	77	96.3	125

Model	Compressor	Compressor		Condenser		Air Defrost		Remote Loads: Three Contactors							
								Low Amps "3L"				High Amps "3H"			
								Evap. Fan Amps	Defrost Htrs. Amps	Electric Defrost		Evap. Fan Amps	Defrost Htrs. Amps	Electric Defrost	
		RLA	LRA	No. Fans	FLA (Total)	MCA	MOPD			MCA	MOPD			MCA	MOPD
BCV0151MEACD	3DS3R17ME	21.2	110	2	2.7	29.2	50	12	40	50.0	60	12	48	60.0	60
BCV0201MEACD	4DBNR20ME	28.2	135	2	5.6	40.9	60	12	42	52.9	80	12	48	60.0	80
BCV0251MEACD	4DHNR22ME	29.9	172	3	4.1	41.4	70	12	51	63.8	80	12	64	80.0	80
BCV0301MEACD	4DJNR28ME	39.6	200	3	8.4	57.9	90	16	64	80.0	110	16	77	96.3	110
BCV0351MEACD	6DHNR35ME	36.5	230	4	11.2	56.9	90	16	64	80.0	100	16	77	96.3	100
BCV0401MEACD	6DJNR40ME	46.2	245	4	11.2	68.9	110	16	64	84.9	125	16	77	96.3	125

Notes:
MCA = Minimum Circuit Ampacity
MOP = Maximum Overcurrent Protection
intelliGen™ and Air Defrost Units do not carry any of the evaporator fan or heater loads.
Power is supplied directly to the evaporators and does not go through the condensing unit.
An evaporator heater hold out relay (option) is recommended when two or more evaporators are connected to a single (BCV) condensing unit to allow termination on coils that have already defrosted to prevent unnecessary steaming. This option is not needed on A0400 intelliGen™ systems wired for a Master / Slave operation.

Mounted Electric Defrost Kits for BCV condensing units include:
Defrost timer, terminal strip, (1) evaporator fan contactor and:
One (1) defrost heater contactor for 1L and 1H codes
Two (2) defrost heater contactors for 2L and 2H codes
Four (4) defrost heater contactors for 4L and 4H codes
Power is supplied to each intelliGen™ evaporator. volt electrical specification.
Each coil terminates its own defrost. Refrigeration will not start until all coils have terminated defrost.

A1 ELECTRICAL DATA

Medium Temperature High Efficiency Models - Copeland 575V (cont.)

Please consult AWEF table on page 71 to confirm DOE compliance per model

								Remote Loads: Two Contactors							
								Low Amps "2L"				High Amps "2H"			
Model	Compressor	Compressor		Condenser		Air Defrost		Evap. Fan Amps	Defrost Htrs. Amps	Electric Defrost		Evap. Fan Amps	Defrost Htrs. Amps	Electric Defrost	
		RLA	LRA	No. Fans	FLA (Total)	MCA	MOPD			MCA	MOPD			MCA	MOPD
BCV0151MEACD	3DS3R17ME	21.2	110	2	2.7	29.2	50	12	38	47.5	60	12	42	52.5	60
BCV0201MEACD	4DBNR20ME	28.2	135	2	5.6	40.9	60	12	38	52.9	80	12	42	52.9	80
BCV0251MEACD	4DHNR22ME	29.9	172	3	4.1	41.4	70	12	38	53.4	80	12	64	80.0	80
BCV0301MEACD	4DJNR28ME	39.6	200	3	8.4	57.9	90	12	48	69.9	100	16	77	96.3	110
BCV0351MEACD	6DHNR35ME	36.5	230	4	11.2	56.9	90	16	48	72.9	100	16	77	96.3	100
BCV0401MEACD	6DJNR40ME	46.2	245	4	11.2	68.9	110	16	48	84.9	125	16	77	96.3	125

								Remote Loads: One Contactor							
								Low Amps "1L"				High Amps "1H"			
Model	Compressor	Compressor		Condenser		Air Defrost		Evap. Fan Amps	Defrost Htrs. Amps	Electric Defrost		Evap. Fan Amps	Defrost Htrs. Amps	Electric Defrost	
		RLA	LRA	No. Fans	FLA (Total)	MCA	MOPD			MCA	MOPD			MCA	MOPD
BCV0151MEACD	3DS3R17ME	21.2	110	2	2.7	29.2	50	12	32	41.2	60	12	38	47.5	60
BCV0201MEACD	4DBNR20ME	28.2	135	2	5.6	40.9	60	12	32	52.9	80	12	38	52.9	80
BCV0251MEACD	4DHNR22ME	29.9	172	3	4.1	41.4	—	—	—	—	—	—	—	—	—
BCV0301MEACD	4DJNR28ME	39.6	200	3	8.4	57.9	—	—	—	—	—	—	—	—	—
BCV0351MEACD	6DHNR35ME	36.5	230	4	11.2	56.9	—	—	—	—	—	—	—	—	—
BCV0401MEACD	6DJNR40ME	46.2	245	4	11.2	68.9	—	—	—	—	—	—	—	—	—

Notes:
MCA = Minimum Circuit Ampacity
MOP = Maximum Overcurrent Protection
intelliGen™ and Air Defrost Units do not carry any of the evaporator fan or heater loads.
Power is supplied directly to the evaporators and does not go through the condensing unit.
An evaporator heater hold out relay (option) is recommended when two or more evaporators are connected to a single (BCV) condensing unit to allow termination on coils that have already defrosted to prevent unnecessary steaming. This option is not needed on A0400 intelliGen™ systems wired for a Master / Slave operation.

Mounted Electric Defrost Kits for BCV condensing units include:
Defrost timer, terminal strip, (1) evaporator fan contactor and:
One (1) defrost heater contactor for 1L and 1H codes
Two (2) defrost heater contactors for 2L and 2H codes
Four (4) defrost heater contactors for 4L and 4H codes
Power is supplied to each intelliGen™ evaporator. volt electrical specification.
Each coil terminates its own defrost. Refrigeration will not start until all coils have terminated defrost.

A1 ELECTRICAL DATA

Low Temperature Models - Copeland/208-230V

Please consult AWEF table on page 71 to confirm DOE compliance per model

								Remote Loads: Four Contactors							
								Low Amps "4L"				High Amps "4H"			
Model	Compressor	Compressor		Condenser		Air Defrost		Evap. Fan Amps	Defrost Htrs. Amps	Electric Defrost		Evap. Fan Amps	Defrost Htrs. Amps	Electric Defrost	
		RLA	LRA	No. Fans	FLA (Total)	MCA	MOPD			MCA	MOPD			MCA	MOPD
BCV0120L\ACD	4DBNF54KE	46.0	220.0	2	7	64.5	110	22	48	86.5	125	22	64	86.5	125
BCV0150L\ACD	4DHNF63KE	47.2	278.0	2	7	66.0	110	25	64	91.0	125	25	91	113.8	125
BCV0220L\ACD	4DJNF76KE	57.7	374.0	2	7	79.1	125	25	96	120.0	150	25	105	131.3	150
BCV0270L\ACD	6DHNF93KE	72.4	450.0	2	7	97.5	150	25	96	122.5	175	25	108	135.0	175
BCV0300L\ACD	6DJNF11ME	85.8	470.0	2	2.1	109.3	175	30	150	187.5	225	30	181	226.3	250

								Remote Loads: Three Contactors							
								Low Amps "3L"				High Amps "3H"			
Model	Compressor	Compressor		Condenser		Air Defrost		Evap. Fan Amps	Defrost Htrs. Amps	Electric Defrost		Evap. Fan Amps	Defrost Htrs. Amps	Electric Defrost	
		RLA	LRA	No. Fans	FLA (Total)	MCA	MOPD			MCA	MOPD			MCA	MOPD
BCV0120L\ACD	4DBNF54KE	46.0	220.0	2	7	64.5	110	20	40	84.5	125	22	48	86.5	125
BCV0150L\ACD	4DHNF63KE	47.2	278.0	2	7	66.0	110	22	70	88.0	125	25	64	91.0	125
BCV0220L\ACD	4DJNF76KE	57.7	374.0	2	7	79.1	125	20	85	106.3	150	25	96	120.0	150
BCV0270L\ACD	6DHNF93KE	72.4	450.0	2	7	97.5	150	20	80	117.5	175	25	96	122.5	175
BCV0300L\ACD	6DJNF11ME	85.8	470.0	2	2.1	109.3	175	20	96	129.3	200	25	96	134.3	200

Notes:
MCA = Minimum Circuit Ampacity
MOP = Maximum Overcurrent Protection

intelliGen™ and Air Defrost Units do not carry any of the evaporator fan or heater loads.
Power is supplied directly to the evaporators and does not go through the condensing unit.
An evaporator heater hold out relay (option) is recommended when two or more evaporators are connected to a single (ACV) condensing unit to allow termination on coils that have already defrosted to prevent unnecessary steaming. This option is not needed on intelliGen™ systems wired for a Master / Slave operation.

Mounted Electric Defrost Kits for BLV condensing units include:
Defrost timer, spring terminal, (1) evaporator fan contactor and:
One (1) defrost heater contactor for 1L and 1H codes
Two (2) defrost heater contactors for 2L and 2H codes
Four (4) defrost heater contactors for 4L and 4H codes
Power is supplied to each intelliGen™ evaporator. volt electrical specification.
Each coil terminates its own defrost. Refrigeration will not start until all coils have terminated defrost.

A1 ELECTRICAL DATA

Low Temperature Models - Copeland/208-230V (cont.)

Please consult AWEF table on page 71 to confirm DOE compliance per model

Model	Compressor	Compressor		Condenser		Air Defrost		Remote Loads: Two Contactors							
								Low Amps "2L"				High Amps "2H"			
		RLA	LRA	No. Fans	FLA (Total)	MCA	MOPD	Evap. Fan Amps	Defrost Htrs. Amps	Electric Defrost MCA	Electric Defrost MOPD	Evap. Fan Amps	Defrost Htrs. Amps	Electric Defrost MCA	Electric Defrost MOPD
BCV012L\ACD	4DBNF54KE	46.0	220.0	2	7	64.5	110	15	34	79.5	125	20	74	92.5	125
BCV0150L\ACD	4DHNF63KE	47.2	278.0	2	7	66.0	110	20	80	100.0	125	20	91	113.8	125
BCV0220L\ACD	4DJNF76KE	57.7	374.0	2	7	79.1	125	20	80	100.0	150	20	96	120.0	150
BCV0270L\ACD	6DHNF93KE	72.4	450.0	2	7	97.5	150	20	80	117.5	175	20	96	120.0	175
BCV0300L\ACD	6DJNF11ME	85.8	470.0	2	2.1	109.3	175	20	80	129.3	200	20	96	129.3	200

Model	Compressor	Compressor		Condenser		Air Defrost		Remote Loads: One Contactor							
								Low Amps "1L"				High Amps "1H"			
		RLA	LRA	No. Fans	FLA (Total)	MCA	MOPD	Evap. Fan Amps	Defrost Htrs. Amps	Electric Defrost MCA	Electric Defrost MOPD	Evap. Fan Amps	Defrost Htrs. Amps	Electric Defrost MCA	Electric Defrost MOPD
BCV0120L\ACD	4DBNF54KE	46.0	220.0	2	7	64.5	110	15	40	79.5	125	15	48	79.5	125
BCV0150L\ACD	4DHNF63KE	47.2	278.0	2	7	66.0	110	15	40	81.0	125	15	48	81.0	125
BCV0220L\ACD	4DJNF76KE	57.7	374.0	2	7	79.1	125	15	40	94.1	150	15	48	94.1	150
BCV0270L\ACD	6DHNF93KE	72.4	450.0	2	7	97.5	150	-	-	-	-	-	-	-	-
BCV0300L\ACD	6DJNF11ME	85.8	470.0	2	2.1	109.3	175	-	-	-	-	-	-	-	-

Notes:

\ C = 208-230/3/60
MCA = Minimum Circuit Ampacity
MOP = Maximum Overcurrent Protection
intelliGen™ and Air Defrost Units do not carry any of the evaporator fan or heater loads.
Power is supplied directly to the evaporators and does not go through the condensing unit.
An evaporator heater hold out relay (option) is recommended when two or more evaporators are connected to a single (BCV) condensing unit to allow termination on coils that have already defrosted to prevent unnecessary steaming. This option is not needed on A0400 intelliGen™ systems wired for a Master / Slave operation.

Mounted Electric Defrost Kits for BCV condensing units include:
Defrost timer, terminal strip, (1) evaporator fan contactor and:
One (1) defrost heater contactor for 1L and 1H codes
Two (2) defrost heater contactors for 2L and 2H codes
Four (4) defrost heater contactors for 4L and 4H codes
Power is supplied to each intelliGen™ evaporator. volt electrical specification.
Each coil terminates its own defrost. Refrigeration will not start until all coils have terminated defrost.

A1 ELECTRICAL DATA

Low Temperature Models - Copeland/460V

Please consult AWEF table on page 71 to confirm DOE compliance per model

Model	Compressor	Compressor		Condenser		Air Defrost		Remote Loads: Four Contactors							
								Low Amps "4L"				High Amps "4H"			
		RLA	LRA	No. Fans	FLA (Total)	MCA	MOPD	Evap. Fan Amps	Defrost Htrs. Amps	Electric Defrost MCA	Electric Defrost MOPD	Evap. Fan Amps	Defrost Htrs. Amps	Electric Defrost MCA	Electric Defrost MOPD
BCV0120L∧ACD	4DBNF54KE	23.0	110.0	2	3.4	32.2	50	-	-	-	-	-	-	-	-
BCV0150L∧ACD	4DHNF63KE	23.6	139.0	2	3.4	32.9	50	15	48	60.0	70	15	48	60.0	70
BCV0220L∧ACD	4DJNF76KE	28.8	187.0	2	3.4	39.5	60	15	48	60.0	80	15	48	60.0	80
BCV0270L∧ACD	6DHNF93KE	36.2	225.0	2	3.4	48.7	80	15	48	63.7	90	15	64	80.0	90
BCV0300L∧ACD	6DJNF11ME	42.9	235.0	2	1.1	54.6	90	20	64	80.0	110	20	91	113.8	125
BCV0400LDACD	6DUNF13ME	60.9	367.0	3	9.9	86.0	125	20	64	106.0	150	20	91	113.8	150

Model	Compressor	Compressor		Condenser		Air Defrost		Remote Loads: Three Contactors							
								Low Amps "3L"				High Amps "3H"			
		RLA	LRA	No. Fans	FLA (Total)	MCA	MOPD	Evap. Fan Amps	Defrost Htrs. Amps	Electric Defrost MCA	Electric Defrost MOPD	Evap. Fan Amps	Defrost Htrs. Amps	Electric Defrost MCA	Electric Defrost MOPD
BCV0120L∧ACD	4DBNF54KE	23.0	110.0	2	3.4	32.2	50	15	22	47.2	70	20	22	52.2	70
BCV0150L∧ACD	4DHNF63KE	23.6	139.0	2	3.4	32.9	50	15	32	47.9	70	15	48	60.0	70
BCV0220L∧ACD	4DJNF76KE	28.8	187.0	2	3.4	39.5	60	15	48	60.0	80	15	48	60.0	80
BCV0270L∧ACD	6DHNF93KE	36.2	225.0	2	3.4	48.7	80	15	48	63.7	90	15	64	80.0	90
BCV0300L∧ACD	6DJNF11ME	42.9	235.0	2	1.1	54.6	90	15	64	80.0	110	22	64	80.0	110
BCV0400LDACD	6DUNF13ME	60.9	367.0	3	9.9	86.0	125	15	64	101.0	150	22	64	108.0	150

Notes:
∧ D = 460/3/60
MCA = Minimum Circuit Ampacity
MOP = Maximum Overcurrent Protection
intelliGen™ and Air Defrost Units do not carry any of the evaporator fan or heater loads.
Power is supplied directly to the evaporators and does not go through the condensing unit.
An evaporator heater hold out relay (option) is recommended when two or more evaporators are connected to a single (BCV) condensing unit to allow termination on coils that have already defrosted to prevent unnecessary steaming. This option is not needed on A0400 intelliGen™ systems wired for a Master / Slave operation.

Mounted Electric Defrost Kits for BCV condensing units include:
Defrost timer, terminal strip, (1) evaporator fan contactor and:
One (1) defrost heater contactor for 1L and 1H codes
Two (2) defrost heater contactors for 2L and 2H codes
Four (4) defrost heater contactors for 4L and 4H codes
Power is supplied to each intelliGen™ evaporator. volt electrical specification.
Each coil terminates its own defrost. Refrigeration will not start until all coils have terminated defrost.

A1 ELECTRICAL DATA

Low Temperature Models - Copeland/460V (cont.)

Please consult AWEF table on page 71 to confirm DOE compliance per model

Model	Compressor	Compressor		Condenser		Air Defrost		Remote Loads: Two Contactors							
								Low Amps "2L"				High Amps "2H"			
		RLA	LRA	No. Fans	FLA (Total)	MCA	MOPD	Evap. Fan Amps	Defrost Htrs. Amps	Electric Defrost MCA	Electric Defrost MOPD	Evap. Fan Amps	Defrost Htrs. Amps	Electric Defrost MCA	Electric Defrost MOPD
BCV0120L∧ACD	4DBNF54KE	23.0	110.0	2	3.4	32.2	50	10	19	42.2	60	15	38	47.5	70
BCV0150L∧ACD	4DHNF63KE	23.6	139.0	2	3.4	32.9	50	15	32	47.9	70	15	48	60.0	70
BCV0220L∧ACD	4DJNF76KE	28.8	187.0	2	3.4	39.5	60	15	48	60.0	80	15	64	80.0	80
BCV0270L∧ACD	6DHNF93KE	36.2	225.0	2	3.4	48.7	80	15	48	63.7	90	15	64	80.0	90
BCV0300L∧ACD	6DJNF11ME	42.9	235.0	2	1.1	54.6	90	15	48	69.6	110	15	80	100.0	110
BCV0400LDACD	6DUNF13ME	60.9	367.0	3	9.9	86.0	125	15	48	101.0	150	15	80	101.0	150

Model	Compressor	Compressor		Condenser		Air Defrost		Remote Loads: One Contactor							
								Low Amps "1L"				High Amps "1H"			
		RLA	LRA	No. Fans	FLA (Total)	MCA	MOPD	Evap. Fan Amps	Defrost Htrs. Amps	Electric Defrost MCA	Electric Defrost MOPD	Evap. Fan Amps	Defrost Htrs. Amps	Electric Defrost MCA	Electric Defrost MOPD
BCV0120L∧ACD	4DBNF54KE	23.0	110.0	2	3.4	32.2	50	10	19	42.2	60	10	24	42.2	60
BCV0150L∧ACD	4DHNF63KE	23.6	139.0	2	3.4	32.9	50	15	24	47.9	70	15	40	50.0	70
BCV0220L∧ACD	4DJNF76KE	28.8	187.0	2	3.4	39.5	60	15	40	54.5	80	15	48	60.0	80
BCV0270L∧ACD	6DHNF93KE	36.2	225.0	2	3.4	48.7	80	15	40	63.7	90	15	48	63.7	90
BCV0300L∧ACD	6DJNF11ME	42.9	235.0	2	1.1	54.6	90	15	40	69.6	110	15	48	69.6	110
BCV0400LDACD	6DUNF13ME	60.9	367.0	3	9.9	86.0	125	15	40	101.0	150	15	48	101.0	150

Notes:

∧ D = 460/3/60
MCA = Minimum Circuit Ampacity
MOP = Maximum Overcurrent Protection
intelliGen™ and Air Defrost Units do not carry any of the evaporator fan or heater loads.
Power is supplied directly to the evaporators and does not go through the condensing unit.
An evaporator heater hold out relay (option) is recommended when two or more evaporators are connected to a single (BCV) condensing unit to allow termination on coils that have already defrosted to prevent unnecessary steaming. This option is not needed on A0400 intelliGen™ systems wired for a Master / Slave operation.

Mounted Electric Defrost Kits for BCV condensing units include:
Defrost timer, terminal strip, (1) evaporator fan contactor and:
One (1) defrost heater contactor for 1L and 1H codes
Two (2) defrost heater contactors for 2L and 2H codes
Four (4) defrost heater contactors for 4L and 4H codes
Power is supplied to each intelliGen™ evaporator. volt electrical specification.
Each coil terminates its own defrost. Refrigeration will not start until all coils have terminated defrost.

A1 ELECTRICAL DATA

Low Temperature Models - Copeland/575V

Please consult AWEF table on page 71 to confirm DOE compliance per model

Model	Compressor	Compressor		Condenser		Air Defrost		Remote Loads: Four Contactors							
								Low Amps "4L"				High Amps "4H"			
		RLA	LRA	No. Fans	FLA (Total)	MCA	MOPD	Evap. Fan Amps	Defrost Htrs. Amps	Electric Defrost MCA	Electric Defrost MOPD	Evap. Fan Amps	Defrost Htrs. Amps	Electric Defrost MCA	Electric Defrost MOPD
BCV0120LEACD	4DBNF54KE	15.6	106	2	2.7	22.2	35	-	-	-	-	-	-	-	-
BCV0150LEACD	4DHNF63KE	18.8	113	2	2.7	26.2	40	12	38	47.5	50	12	38	47.5	50
BCV0220LEACD	4DJNF76KE	26.1	135	2	2.7	35.3	60	12	40	50	70	12	40	50.0	70
BCV0270LEACD	6DHNF93KE	29.2	172	2	2.7	39.2	60	12	48	60	80	12	51	63.8	80
BCV0300LEACD	6DJNF11ME	35.5	200	2	0.9	45.2	80	16	64	80	90	16	72.6	90.8	100
BCV0400LEACD	6DUNF13ME	48.0	335.2	3	8.0	67.9	110	16	64	83.9	125	16	72.6	90.8	125

Model	Compressor	Compressor		Condenser		Air Defrost		Remote Loads: Three Contactors							
								Low Amps "3L"				High Amps "3H"			
		RLA	LRA	No. Fans	FLA (Total)	MCA	MOPD	Evap. Fan Amps	Defrost Htrs. Amps	Electric Defrost MCA	Electric Defrost MOPD	Evap. Fan Amps	Defrost Htrs. Amps	Electric Defrost MCA	Electric Defrost MOPD
BCV0120LEACD	4DBNF54KE	15.6	106	2	2.7	22.2	35	-	-	-	-	-	-	-	-
BCV0150LEACD	4DHNF63KE	18.8	113	2	2.7	26.2	40	12	38	47.5	50	12	40	50.0	50
BCV0220LEACD	4DJNF76KE	26.1	135	2	2.7	35.3	60	12	40	50	70	12	40	50.0	70
BCV0270LEACD	6DHNF93KE	29.2	172	2	2.7	39.2	60	12	46	57.5	80	12	51	63.8	80
BCV0300LEACD	6DJNF11ME	35.5	200	2	0.9	45.2	80	16	64	80	90	12	72	90.0	90
BCV0400LEACD	6DUNF13ME	48.0	335.2	3	8.0	67.9	110	12	64	80	125	12	72	90.0	125

Notes:
MCA = Minimum Circuit Ampacity
MOP = Maximum Overcurrent Protection
intelliGen™ and Air Defrost Units do not carry any of the evaporator fan or heater loads.
Power is supplied directly to the evaporators and does not go through the condensing unit.
An evaporator heater hold out relay (option) is recommended when two or more evaporators are connected to a single (BCV) condensing unit to allow termination on coils that have already defrosted to prevent unnecessary steaming. This option is not needed on A0400 intelliGen™ systems wired for a Master / Slave operation.

Mounted Electric Defrost Kits for BCV condensing units include:
Defrost timer, terminal strip, (1) evaporator fan contactor and:
One (1) defrost heater contactor for 1L and 1H codes
Two (2) defrost heater contactors for 2L and 2H codes
Four (4) defrost heater contactors for 4L and 4H codes
Power is supplied to each intelliGen™ evaporator. volt electrical specification.
Each coil terminates its own defrost. Refrigeration will not start until all coils have terminated defrost.

A1 ELECTRICAL DATA

Low Temperature Models - Copeland/575V (cont.)

Please consult AWEF table on page 71 to confirm DOE compliance per model

Model	Compressor	Compressor		Condenser		Air Defrost		Remote Loads: Two Contactors							
								Low Amps "2L"				High Amps "2H"			
		RLA	LRA	No. Fans	FLA (Total)	MCA	MOPD	Evap. Fan Amps	Defrost Htrs. Amps	Electric Defrost MCA	Electric Defrost MOPD	Evap. Fan Amps	Defrost Htrs. Amps	Electric Defrost MCA	Electric Defrost MOPD
BCV0120LEACD	4DBNF54KE	15.6	106	2	2.7	22.2	35	10	24	32.2	45	10	32	40.0	45
BCV0150LEACD	4DHNF63KE	18.8	113	2	2.7	26.2	40	12	26	38.2	50	12	38	47.5	50
BCV0220LEACD	4DJNF76KE	26.1	135	2	2.7	35.3	60	12	38	47.5	70	12	43	53.8	70
BCV0270LEACD	6DHNF93KE	29.2	172	2	2.7	39.2	60	12	38	51.2	80	12	51	63.8	80
BCV0300LEACD	6DJNF11ME	35.5	200	2	0.9	45.2	80	12	48	60.0	90	12	64	80.0	90
BCV0400LEACD	6DUNF13ME	48.0	335.2	3	8.0	67.9	110	12	48	79.9	125	12	64	80.0	125

Model	Compressor	Compressor		Condenser		Air Defrost		Remote Loads: One Contactor							
								Low Amps "1L"				High Amps "1H"			
		RLA	LRA	No. Fans	FLA (Total)	MCA	MOPD	Evap. Fan Amps	Defrost Htrs. Amps	Electric Defrost MCA	Electric Defrost MOPD	Evap. Fan Amps	Defrost Htrs. Amps	Electric Defrost MCA	Electric Defrost MOPD
BCV0120LEACD	4DBNF54KE	15.6	106	2	2.7	22.2	35	10	16	32.2	45	10	24	32.2	45
BCV0150LEACD	4DHNF63KE	18.8	113	2	2.7	26.2	40	12	19	38.2	50	12	32	40.0	50
BCV0220LEACD	4DJNF76KE	26.1	135	2	2.7	35.3	60	12	32	47.3	70	12	38	47.5	70
BCV0270LEACD	6DHNF93KE	29.2	172	2	2.7	39.2	60	12	32	51.2	80	12	38	51.2	80
BCV0300LEACD	6DJNF11ME	35.5	200	2	0.9	45.2	80	12	40	57.2	90	12	48	60.0	90
BCV0400LEACD	6DUNF13ME	48.0	335.2	3	8.0	67.9	110	12	40	79.9	125	12	48	79.9	125

Notes:
MCA = Minimum Circuit Ampacity
MOP = Maximum Overcurrent Protection

intelliGen™ and Air Defrost Units do not carry any of the evaporator fan or heater loads.
Power is supplied directly to the evaporators and does not go through the condensing unit.
An evaporator heater hold out relay (option) is recommended when two or more evaporators are connected to a single (ACV) condensing unit to allow termination on coils that have already defrosted to prevent unnecessary steaming. This option is not needed on intelliGen™ systems wired for a Master / Slave operation.

Mounted Electric Defrost Kits for BLV condensing units include:
Defrost timer, spring terminal, (1) evaporator fan contactor and:
One (1) defrost heater contactor for 1L and 1H codes
Two (2) defrost heater contactors for 2L and 2H codes
Four (4) defrost heater contactors for 4L and 4H codes
Power is supplied to each intelliGen™ evaporator. volt electrical specification.
Each coil terminates its own defrost. Refrigeration will not start until all coils have terminated defrost.

AWEF DATA – MEDIUM TEMPERATURE

Medium Temperature Models - Copeland Discus™ Compressors

If model has a numerical value in the table below, the following statement applies:
This refrigeration system is designed and certified for use in walk-in cooler applications

Model	A2L			A1				
	R-454A	R-454C	R-455A	R-404A/R-507A	R-448A/R-449A	R-407A	R-407C	R-407F
BCV0150M^AC±	7.6	7.6	7.6	7.6	7.6	7.6	7.6	7.6
BCV0200M^AC±	7.6	7.6	7.6	7.6	7.6	7.6	7.6	7.6
BCV0250M^AC±	7.6	7.6	7.6	7.6	7.6	7.6	7.6	7.6
BCV0260M^AC±	7.6	7.6	7.6	7.6	7.6	7.6	7.6	7.6
BCV0300M^AC±	7.6	7.6	7.6	7.6	7.6	7.6	7.6	7.6
BCV0350M^AC±	7.6	7.6	7.6	7.6	7.6	–	–	7.6
BCV0400M*AC±	7.6	7.6	7.6	–	7.6	7.6	–	7.6
BCV0500MDAC±	7.6	7.6	7.6	–	7.6	7.6	7.6	7.6
BCV0151M^AC±	7.6	7.6	7.6	7.6	7.6	7.6	7.6	7.6
BCV0201M^AC±	7.6	–	–	7.6	–	–	–	7.6
BCV0251M^AC±	7.6	7.6	7.6	7.6	7.6	7.6	7.6	7.6
BCV0301M^AC±	7.6	–	–	–	–	–	–	–
BCV0351M^AC±	7.6	7.6	7.6	7.6	7.6	7.6	7.6	7.6
BCV0401M*AC±	7.6	–	–	–	–	–	–	7.6

Notes:
^ C = 208-230/3/60, D = 460/3/60
* K = 230/3/60
± E = A2L/A1 Discus Compressor, D = A1 Discus Compressor
X = model not suitable for this refrigerant
— = model is not DOE AWEF compliant

AWEF DATA – MEDIUM TEMPERATURE

Medium Temperature Models - Copeland Discus™ Compressors, 575V

If model has a numerical value in the table below, the following statement applies:
This refrigeration system is designed and certified for use in walk-in cooler applications

Model	A2L			A1				
	R-454A	R-454C	R-455A	R-404A/R-507A	R-448A/R-449A	R-407A	R-407C	R-407F
BCV0150MEAC±	7.6	7.6	7.6	7.6	7.6	7.6	7.6	7.6
BCV0200MEAC±	7.6	7.6	7.6	–	–	–	–	7.6
BCV0250MEAC±	7.6	7.6	7.6	7.6	–	–	–	7.6
BCV0260MEAC±	7.6	7.6	7.6	7.6	7.6	7.6	7.6	7.6
BCV0300MEAC±	7.6	7.6	7.6	–	–	–	–	7.6
BCV0350MEAC±	7.6	7.6	7.6	7.6	7.6	–	–	7.6
BCV0400MEAC±	7.6	7.6	7.6	–	7.6	7.6	–	7.6
BCV0500MEAC±	7.6	7.6	7.6	–	7.6	7.6	7.6	7.6
BCV0151MEAC±	7.6	7.6	7.6	7.6	7.6	7.6	7.6	7.6
BCV0201MEAC±	7.6	–	–	7.6	–	–	–	7.6
BCV0251MEAC±	7.6	7.6	7.6	7.6	7.6	7.6	7.6	7.6
BCV0301MEAC±	7.6	–	–	–	–	–	–	–
BCV0351MEAC±	7.6	7.6	7.6	7.6	–	–	–	–
BCV0401MEAC±	7.6	–	–	–	–	–	–	7.6

Notes:
± E = A2L/A1 Discus Compressor, D = A1 Discus Compressor
X = model not suitable for this refrigerant
— = model is not DOE AWEF compliant

AWEF DATA – LOW TEMPERATURE

Low Temperature Models - Copeland Discus™ Compressors

If model has a numerical value in the table below, the following statement applies:
This refrigeration system is designed and certified for use in walk-in cooler applications

Model	A2L			A1					
	R-454A	R-454C	R-455A	R-404A/ R-507A	R-448A	R-449A	R-407A	R-407C	R-407F
BCV0120L^AC±	3.15	3.15	3.15	3.15	3.15	3.15	3.15	3.15	3.15
BCV0150L^AC±	3.15	3.15	3.15	3.15	3.15	3.15	–	–	3.15
BCV0220L^AC±	3.15	3.15	3.15	3.15	3.15	3.15	3.15	3.15	3.15
BCV0270L^AC±	3.15	3.15	–	3.15	–	–	–	–	3.15
BCV0300L^AC±	–	–	–	–	3.15	3.15	–	–	3.15
BCV0400L+AC±	–	–	–	–	3.15	–	–	3.15	–

Notes:
^ C = 208-230/3/60, D = 460/3/60, E = 575/3/60
+ D = 460/3/60, E = 575/3/60
± E = A2L/A1 Discus Compressor, D = A1 Discus Compressor
X = model not suitable for this refrigerant
— = model is not DOE AWEF compliant

MODELS WITH BITZER SEMI-HERMETIC COMPRESSORS

A2L PERFORMANCE DATA – R-454C

Medium Temperature Models - Bitzer Semi-Hermetic Compressors

Please consult AWEF table on page 109 to confirm DOE compliance per model

R-454C		Capacity BTUH @ 90°F Ambient by SST									
Model	Compressor	40°F	35°F	30°F	25°F	20°F	15°F	10°F	0°F	-10°F	-20°F
BCV0150M^ABV	4PES-15Y	158,640	142,770	127,850	113,860	100,900	89,060	78,150	59,400	44,190	---
BCV0200M^ABV	4NES-20Y	184,440	166,680	149,810	133,970	119,290	105,850	93,350	71,690	53,950	39,500
BCV0220M^ABV	4JE-22Y	203,450	184,500	166,390	149,500	133,520	118,760	105,070	81,010	61,180	44,650
BCV0250M^ABV	4HE-25Y	235,890	214,490	194,200	175,040	156,820	139,860	124,150	96,480	73,460	54,230
BCV0300M^ABV	4GE-30Y	277,940	252,070	227,630	204,720	183,140	163,200	144,740	112,510	85,650	63,330
BCV0330M^ABV	6JE-33Y	306,990	277,770	249,880	223,880	199,480	177,000	156,300	120,240	90,470	66,020
BCV0350M^ABV	6HE-35Y	352,480	319,990	288,970	259,800	232,470	207,220	183,700	142,600	108,510	80,110
BCV0400M^ABV	6GE-40Y	401,680	365,350	330,510	297,380	266,550	237,990	211,400	164,620	125,710	93,090
BCV0500M^ABV	6FE-50Y	480,000	437,630	397,680	359,030	322,530	288,710	257,100	200,950	153,800	114,140

R-454C		Capacity BTUH @ 95°F Ambient by SST									
New Model	Compressor	40°F	35°F	30°F	25°F	20°F	15°F	10°F	0°F	-10°F	-20°F
BCV0150M^ABV	**4PES-15Y**	**152,110**	**136,930**	**122,440**	**108,890**	**96,390**	**84,950**	**74,530**	**56,440**	**41,830**	**---**
BCV0200M^ABV	**4NES-20Y**	**177,000**	**159,910**	**143,660**	**128,390**	**114,310**	**101,240**	**89,230**	**68,350**	**51,310**	**37,450**
BCV0220M^ABV	**4JE-22Y**	**195,210**	**177,000**	**159,540**	**143,130**	**127,810**	**113,590**	**100,380**	**77,190**	**58,060**	**42,220**
BCV0250M^ABV	**4HE-25Y**	**226,050**	**205,690**	**186,180**	**167,750**	**150,190**	**133,840**	**118,780**	**92,130**	**69,990**	**51,520**
BCV0300M^ABV	**4GE-30Y**	**266,700**	**241,810**	**218,530**	**196,040**	**175,490**	**156,280**	**138,630**	**107,550**	**81,740**	**60,340**
BCV0330M^ABV	**6JE-33Y**	**295,150**	**266,900**	**240,170**	**214,800**	**191,210**	**169,320**	**149,520**	**114,630**	**85,930**	**62,380**
BCV0350M^ABV	**6HE-35Y**	**337,950**	**307,120**	**277,340**	**249,180**	**222,880**	**198,520**	**175,850**	**136,220**	**103,390**	**76,080**
BCV0400M^ABV	**6GE-40Y**	**386,010**	**350,580**	**317,060**	**285,230**	**255,560**	**228,090**	**202,550**	**157,430**	**120,010**	**88,580**
BCV0500M^ABV	**6FE-50Y**	**460,630**	**420,070**	**381,040**	**343,990**	**309,040**	**276,560**	**246,060**	**192,260**	**147,010**	**108,790**

R-454C		Capacity BTUH @ 100°F Ambient by SST									
Model	Compressor	40°F	35°F	30°F	25°F	20°F	15°F	10°F	0°F	-10°F	-20°F
BCV0150M^ABV	4PES-15Y	145,610	130,960	117,000	103,940	91,930	80,890	70,880	53,480	39,430	---
BCV0200M^ABV	4NES-20Y	169,510	153,160	137,460	122,950	109,260	96,640	85,120	65,010	48,630	35,330
BCV0220M^ABV	4JE-22Y	186,820	169,460	152,670	137,010	122,150	108,400	95,610	73,330	54,980	39,690
BCV0250M^ABV	4HE-25Y	216,400	196,870	177,990	160,370	143,500	127,810	113,330	87,700	66,450	48,710
BCV0300M^ABV	4GE-30Y	255,380	231,500	209,130	187,720	167,770	149,240	132,290	102,490	77,720	57,180
BCV0330M^ABV	6JE-33Y	283,240	256,140	230,190	205,700	182,920	161,850	142,720	108,980	81,290	58,620
BCV0350M^ABV	6HE-35Y	324,330	294,310	265,600	238,430	213,210	189,740	167,920	129,800	98,180	71,930
BCV0400M^ABV	6GE-40Y	369,750	335,750	303,590	272,990	244,500	217,960	193,590	150,180	114,140	83,860
BCV0500M^ABV	6FE-50Y	439,440	401,660	364,310	328,850	295,400	264,240	235,040	183,370	139,930	103,110

Notes:

LOW SUCTION TEMPERATURE APPLICATIONS IN THESE RANGES REQUIRE THE ADDITION OF A HEAD FAN

^ C = 208-230/3/60, D = 460/3/60

For 50 cycle capacity, multiply values by .86

A2L PERFORMANCE DATA – R-454C

Medium Temperature Models - Bitzer Semi-Hermetic Compressors (cont.)

Please consult AWEF table on page 109 to confirm DOE compliance per model

R-454C		Capacity BTUH @ 110°F Ambient by SST									
Model	Compressor	40°F	35°F	30°F	25°F	20°F	15°F	10°F	0°F	-10°F	-20°F
BCV0150M^ABV	4PES-15Y	132,680	119,140	106,220	94,090	83,040	72,860	63,600	47,550	34,640	---
BCV0200M^ABV	4NES-20Y	---	139,590	125,230	111,760	99,130	87,470	76,760	58,280	43,190	*31,010*
BCV0220M^ABV	4JE-22Y	---	---	138,860	124,210	110,640	97,840	86,110	65,560	48,530	*34,490*
BCV0250M^ABV	4HE-25Y	---	---	---	145,560	130,040	115,440	102,300	78,650	59,100	*42,830*
BCV0300M^ABV	4GE-30Y	---	211,030	190,130	170,450	152,100	135,220	119,470	92,100	69,380	*50,600*
BCV0330M^ABV	6JE-33Y	---	234,180	210,100	187,390	166,240	146,780	128,740	97,500	71,840	*50,870*
BCV0350M^ABV	6HE-35Y	---	---	241,950	216,930	193,670	171,930	151,960	116,590	87,430	*63,140*
BCV0400M^ABV	6GE-40Y	---	305,970	276,430	248,360	221,950	197,810	175,080	135,110	101,810	*73,790*
BCV0500M^ABV	6FE-50Y	---	---	330,380	298,320	267,740	239,210	212,590	165,070	125,030	*91,010*

Notes:

LOW SUCTION TEMPERATURE APPLICATIONS IN THESE RANGES REQUIRE THE ADDITION OF A HEAD FAN

^ C = 208-230/3/60, D = 460/3/60

For 50 cycle capacity, multiply values by .86

A2L PERFORMANCE DATA – R-455A

Medium Temperature Models - Bitzer Semi-Hermetic Compressors

Please consult AWEF table on page 109 to confirm DOE compliance per model

R-455A		Capacity BTUH @ 90°F Ambient by SST									
Model	Compressor	40°F	35°F	30°F	25°F	20°F	15°F	10°F	0°F	-10°F	-20°F
BCV0150M^ABV	4PES-15Y	165,050	148,290	132,590	118,000	104,420	92,020	80,730	61,140	45,280	---
BCV0200M^ABV	4NES-20Y	191,990	173,380	155,750	139,180	123,810	109,710	96,650	74,080	55,670	40,660
BCV0220M^ABV	4JE-22Y	211,490	191,680	172,770	154,950	138,230	122,840	108,630	83,610	62,930	45,790
BCV0250M^ABV	4HE-25Y	245,030	222,800	201,550	181,400	162,470	144,870	128,640	99,780	75,850	55,910
BCV0300M^ABV	4GE-30Y	288,050	261,190	235,660	211,700	189,320	168,700	149,580	116,150	88,400	65,340
BCV0330M^ABV	6JE-33Y	320,460	289,530	260,220	232,720	207,160	183,680	161,900	124,190	93,170	67,620
BCV0350M^ABV	6HE-35Y	366,260	332,490	300,150	269,680	241,180	214,770	190,300	147,500	112,000	82,470
BCV0400M^ABV	6GE-40Y	416,340	377,930	341,510	307,150	275,140	245,500	217,810	169,570	129,370	95,810
BCV0500M^ABV	6FE-50Y	496,020	452,520	410,610	370,790	333,290	298,270	265,760	207,730	159,000	117,950

R-455A		Capacity BTUH @ 95°F Ambient by SST									
Model	Compressor	40°F	35°F	30°F	25°F	20°F	15°F	10°F	0°F	-10°F	-20°F
BCV0150M^ABV	**4PES-15Y**	**158,210**	**142,060**	**126,890**	**112,830**	**99,710**	**87,780**	**76,860**	**58,010**	**42,760**	**---**
BCV0200M^ABV	**4NES-20Y**	**184,210**	**166,260**	**149,270**	**133,290**	**118,460**	**104,850**	**92,250**	**70,510**	**52,800**	**38,360**
BCV0220M^ABV	**4JE-22Y**	**202,870**	**183,790**	**165,470**	**148,340**	**132,240**	**117,380**	**103,610**	**79,500**	**59,570**	**43,070**
BCV0250M^ABV	**4HE-25Y**	**234,840**	**213,540**	**193,070**	**173,680**	**155,440**	**138,510**	**122,810**	**95,070**	**72,040**	**52,870**
BCV0300M^ABV	**4GE-30Y**	**276,180**	**250,350**	**225,800**	**202,680**	**181,180**	**161,310**	**142,960**	**110,750**	**84,100**	**61,900**
BCV0330M^ABV	**6JE-33Y**	**307,980**	**278,020**	**249,710**	**223,170**	**198,400**	**175,720**	**154,710**	**118,180**	**88,220**	**63,560**
BCV0350M^ABV	**6HE-35Y**	**351,530**	**318,900**	**287,850**	**258,500**	**230,980**	**205,530**	**181,900**	**140,630**	**106,390**	***77,940***
BCV0400M^ABV	**6GE-40Y**	**399,210**	**362,340**	**327,320**	**294,240**	**263,390**	**234,790**	**208,280**	**161,730**	**123,040**	***90,740***
BCV0500M^ABV	**6FE-50Y**	**474,890**	**433,240**	**393,000**	**354,900**	**318,870**	**285,270**	**253,950**	**198,200**	**151,400**	***111,760***

R-455A		Capacity BTUH @ 100°F Ambient by SST									
Model	Compressor	40°F	35°F	30°F	25°F	20°F	15°F	10°F	0°F	-10°F	-20°F
BCV0150M^ABV	4PES-15Y	151,390	135,830	121,220	107,610	94,950	83,500	72,980	54,840	40,160	---
BCV0200M^ABV	4NES-20Y	176,390	159,140	142,710	127,380	113,070	99,890	87,850	66,900	49,870	*36,020*
BCV0220M^ABV	4JE-22Y	194,170	175,760	158,230	141,700	126,200	111,890	98,540	75,330	56,140	*40,260*
BCV0250M^ABV	4HE-25Y	224,600	204,160	184,520	165,810	148,280	132,040	116,790	90,220	68,100	*49,690*
BCV0300M^ABV	4GE-30Y	264,260	239,430	215,840	193,630	173,010	153,760	136,180	105,230	79,630	*58,350*
BCV0330M^ABV	6JE-33Y	295,290	266,590	239,230	213,490	189,780	167,570	147,360	112,070	83,170	*59,410*
BCV0350M^ABV	6HE-35Y	336,650	305,390	275,460	247,130	220,640	196,210	173,420	133,660	100,680	*73,230*
BCV0400M^ABV	6GE-40Y	381,780	346,680	312,970	281,170	251,400	223,820	198,450	153,690	116,500	85,410
BCV0500M^ABV	6FE-50Y	453,610	413,790	375,350	338,790	304,180	271,940	241,800	188,490	143,540	105,310

Notes:

LOW SUCTION TEMPERATURE APPLICATIONS IN THESE RANGES REQUIRE THE ADDITION OF A HEAD FAN

^ C = 208-230/3/60, D = 460/3/60

For 50 cycle capacity, multiply values by .86

A2L PERFORMANCE DATA – R-455A

Medium Temperature Models - Bitzer Semi-Hermetic (cont.)

Please consult AWEF table on page 109 to confirm DOE compliance per model

R-455A		Capacity BTUH @ 110°F Ambient by SST									
Model	Compressor	40°F	35°F	30°F	25°F	20°F	15°F	10°F	0°F	-10°F	-20°F
BCV0150M^ABV	4PES-15Y	---	123,350	109,830	97,100	85,520	74,860	65,130	48,380	34,880	---
BCV0200M^ABV	4NES-20Y	---	---	129,640	115,400	102,190	90,010	78,840	59,510	43,780	31,060
BCV0220M^ABV	4JE-22Y	---	---	---	128,270	114,010	100,560	88,330	66,830	49,050	34,360
BCV0250M^ABV	4HE-25Y	---	---	---	150,050	133,900	118,960	104,890	80,350	59,970	43,000
BCV0300M^ABV	4GE-30Y	---	---	195,610	175,350	156,070	138,540	122,290	93,860	70,300	50,770
BCV0330M^ABV	6JE-33Y	---	---	217,960	194,080	171,740	151,250	132,390	99,600	72,690	50,610
BCV0350M^ABV	6HE-35Y	---	---	---	224,210	199,800	177,000	156,050	119,190	*88,630*	*63,250*
BCV0400M^ABV	6GE-40Y	---	---	283,770	254,540	227,100	201,810	178,320	137,130	*102,840*	74,090
BCV0500M^ABV	6FE-50Y	---	---	---	305,790	274,470	244,810	217,280	168,340	*126,800*	91,370

Notes:

LOW SUCTION TEMPERATURE APPLICATIONS IN THESE RANGES REQUIRE THE ADDITION OF A HEAD FAN

Liquid Injection via CIC is Required

^ C = 208-230/3/60, D = 460/3/60

For 50 cycle capacity, multiply values by .86

A2L PERFORMANCE DATA – R-454C

Low Temperature Models - Bitzer Semi-Hermetic Compressors

Please consult AWEF table on page 109 to confirm DOE compliance per model

R-454C		Capacity BTUH @ 90°F Ambient by SST								
Model	Compressor	0°F	-5°F	-10°F	-15°F	-20°F	-25°F	-30°F	-35°F	-40°F
BCV0130L^ABV	4JE-15Y	85,090	74,290	64,550	55,560	47,410	39,930	33,160	---	---
BCV0150L^ABV	4HE-18Y	100,220	87,840	76,500	66,140	56,620	47,940	40,010	---	---
BCV0200L^ABV	4GE-23Y	115,960	101,980	89,120	77,360	66,570	56,640	47,590	39,220	---
BCV0220L^ABV	6JE-25Y	123,970	108,550	94,470	81,490	69,760	59,010	49,180	40,120	---
BCV0250L^ABV	6HE-28Y	143,340	125,960	109,940	95,250	81,830	69,490	58,160	47,690	37,980
BCV0300L^ABV	6GE-34Y	165,570	146,700	129,210	112,960	97,850	84,010	71,140	59,210	47,920
BCV0400L^ABV	6FE-44Y	205,280	180,950	158,530	137,820	118,760	101,290	85,090	70,030	55,920

R-454C		Capacity BTUH @ 95°F Ambient by SST								
Model	Compressor	0°F	-5°F	-10°F	-15°F	-20°F	-25°F	-30°F	-35°F	-40°F
BCV0130L^ABV	**4JE-15Y**	**81,180**	**70,820**	**61,360**	**52,680**	**44,840**	**37,640**	**31,120**	**---**	**---**
BCV0150L^ABV	**4HE-18Y**	**95,800**	**83,790**	**72,850**	**62,880**	**53,720**	**45,410**	**37,780**	**---**	**---**
BCV0200L^ABV	**4GE-23Y**	**110,880**	**97,410**	**85,020**	**73,660**	**63,340**	**53,820**	**45,150**	**37,130**	**---**
BCV0220L^ABV	**6JE-25Y**	**118,380**	**103,450**	**89,860**	**77,280**	**65,980**	**55,590**	**46,180**	**37,480**	**---**
BCV0250L^ABV	**6HE-28Y**	**136,870**	**120,080**	**104,620**	**90,490**	**77,500**	**65,710**	**54,830**	**44,800**	**35,490**
BCV0300L^ABV	**6GE-34Y**	**158,260**	**140,130**	**123,300**	**107,670**	**93,190**	**79,880**	**67,620**	**56,140**	**45,360**
BCV0400L^ABV	**6FE-44Y**	**196,190**	**172,630**	**151,270**	**131,250**	**112,950**	**96,190**	**80,660**	**66,270**	**52,780**

R-454C		Capacity BTUH @ 100°F Ambient by SST								
Model	Compressor	0°F	-5°F	-10°F	-15°F	-20°F	-25°F	-30°F	-35°F	-40°F
BCV0130L^ABV	4JE-15Y	77,310	67,320	58,210	49,830	42,280	35,360	29,110	---	---
BCV0150L^ABV	4HE-18Y	91,380	79,770	69,230	59,630	50,830	42,830	35,570	---	---
BCV0200L^ABV	4GE-23Y	105,750	92,880	80,940	70,030	60,130	51,010	42,730	35,080	---
BCV0220L^ABV	6JE-25Y	112,830	98,300	85,200	73,130	62,210	52,210	43,170	34,840	---
BCV0250L^ABV	6HE-28Y	130,430	114,260	99,390	85,730	73,240	61,930	51,480	41,890	33,000
BCV0300L^ABV	6GE-34Y	150,980	133,550	117,400	102,400	88,530	75,740	63,940	53,040	42,760
BCV0400L^ABV	6FE-44Y	187,140	164,530	143,970	124,750	107,230	91,070	76,270	62,430	49,580

R-454C		Capacity BTUH @ 110°F Ambient by SST								
Model	Compressor	0°F	-5°F	-10°F	-15°F	-20°F	-25°F	-30°F	-35°F	-40°F
BCV0130L^ABV	4JE-15Y	69,700	60,430	51,950	44,190	37,220	30,850	---	---	---
BCV0150L^ABV	4HE-18Y	82,540	71,820	62,110	53,220	45,110	37,770	31,110	---	---
BCV0200L^ABV	4GE-23Y	95,830	83,830	72,880	62,850	53,770	45,450	37,910	31,010	---
BCV0220L^ABV	6JE-25Y	101,810	88,460	76,120	64,940	54,750	45,510	37,190	29,550	---
BCV0250L^ABV	6HE-28Y	117,720	102,650	88,960	76,320	64,790	54,380	44,820	36,080	27,960
BCV0300L^ABV	6GE-34Y	---	120,390	105,570	91,840	79,170	67,420	56,680	46,750	37,420
BCV0400L^ABV	6FE-44Y	168,880	148,310	129,290	111,710	95,590	80,880	67,320	54,790	43,150

Notes:

LOW SUCTION TEMPERATURE APPLICATIONS IN THESE RANGES REQUIRE THE ADDITION OF A HEAD FAN

Liquid Injection via CIC is Required

^ C = 208-230/3/60, D = 460/3/60

A2L PERFORMANCE DATA – R-455A

Low Temperature Models - Bitzer Semi-Hermetic Compressors

Please consult AWEF table on page 109 to confirm DOE compliance per model

R-455A		Capacity BTUH @ 90°F Ambient by SST								
Model	Compressor	0°F	-5°F	-10°F	-15°F	-20°F	-25°F	-30°F	-35°F	-40°F
BCV0130L^ABV	4JE-15Y	87,880	76,710	66,500	57,150	48,650	40,900	33,890	---	---
BCV0150L^ABV	4HE-18Y	103,520	90,650	78,870	68,080	58,230	49,250	41,070	---	---
BCV0200L^ABV	4GE-23Y	119,920	105,290	92,050	79,840	68,700	58,500	49,170	40,570	---
BCV0220L^ABV	6JE-25Y	128,360	112,290	97,540	84,050	71,750	60,560	50,360	40,960	---
BCV0250L^ABV	6HE-28Y	148,400	130,290	113,580	98,400	84,400	71,630	59,940	49,140	---
BCV0300L^ABV	6GE-34Y	171,020	151,660	133,600	116,810	101,280	86,990	73,820	61,540	50,080
BCV0400L^ABV	6FE-44Y	212,170	187,010	163,740	142,310	122,630	104,560	87,950	72,460	---

R-455A		Capacity BTUH @ 95°F Ambient by SST								
Model	Compressor	0°F	-5°F	-10°F	-15°F	-20°F	-25°F	-30°F	-35°F	-40°F
BCV0130L^ABV	**4JE-15Y**	**83,860**	**73,010**	**63,150**	**54,130**	**45,930**	**38,480**	**31,730**	**---**	**---**
BCV0150L^ABV	**4HE-18Y**	**98,840**	**86,370**	**75,020**	**64,620**	**55,160**	**46,510**	**38,680**	**---**	**---**
BCV0200L^ABV	**4GE-23Y**	**114,500**	**100,500**	**87,690**	**75,970**	**65,250**	**55,470**	**46,560**	**38,340**	**---**
BCV0220L^ABV	**6JE-25Y**	**122,500**	**106,830**	**92,610**	**79,580**	**67,730**	**56,940**	**47,140**	**38,090**	**---**
BCV0250L^ABV	**6HE-28Y**	**141,560**	**124,170**	**107,980**	**93,300**	**79,830**	**67,540**	**56,320**	**45,940**	**---**
BCV0300L^ABV	**6GE-34Y**	**163,270**	**144,540**	**127,260**	**111,220**	**96,160**	**82,480**	**69,840**	**58,100**	**47,140**
BCV0400L^ABV	**6FE-44Y**	**202,580**	**178,210**	**155,960**	**135,360**	**116,440**	**99,090**	**83,160**	**68,300**	**---**

R-455A		Capacity BTUH @ 100°F Ambient by SST								
Model	Compressor	0°F	-5°F	-10°F	-15°F	-20°F	-25°F	-30°F	-35°F	-40°F
BCV0130L^ABV	4JE-15Y	79,780	69,300	59,780	51,100	43,200	36,020	29,530	---	---
BCV0150L^ABV	4HE-18Y	94,140	82,120	71,160	61,150	52,050	43,760	36,230	---	---
BCV0200L^ABV	4GE-23Y	109,090	95,640	83,340	72,060	61,790	52,430	43,880	36,040	---
BCV0220L^ABV	6JE-25Y	116,590	101,420	87,700	75,110	63,670	53,280	43,850	35,160	---
BCV0250L^ABV	6HE-28Y	134,700	117,830	102,370	88,150	75,220	63,390	52,650	42,700	---
BCV0300L^ABV	6GE-34Y	155,450	137,480	120,830	105,350	91,040	77,870	65,800	54,550	44,100
BCV0400L^ABV	6FE-44Y	192,940	169,510	148,110	128,340	110,250	93,550	78,310	64,100	---

R-455A		Capacity BTUH @ 110°F Ambient by SST								
Model	Compressor	0°F	-5°F	-10°F	-15°F	-20°F	-25°F	-30°F	-35°F	-40°F
BCV0130L^ABV	4JE-15Y	71,650	61,890	53,080	44,990	37,700	31,080	25,100	---	---
BCV0150L^ABV	4HE-18Y	84,690	73,590	63,460	54,210	45,820	38,190	31,310	---	---
BCV0200L^ABV	4GE-23Y	98,300	85,930	74,600	64,250	54,830	46,270	38,510	31,400	---
BCV0220L^ABV	6JE-25Y	104,720	90,640	77,870	66,130	55,520	45,880	37,170	29,160	---
BCV0250L^ABV	6HE-28Y	121,010	105,260	90,930	77,870	65,910	55,040	45,110	36,030	27,640
BCV0300L^ABV	6GE-34Y	---	123,040	107,830	93,520	80,490	68,530	57,470	47,230	37,700
BCV0400L^ABV	6FE-44Y	173,650	152,160	132,400	114,340	97,710	82,450	68,510	55,590	43,620

Notes:

LOW SUCTION TEMPERATURE APPLICATIONS IN THESE RANGES REQUIRE THE ADDITION OF A HEAD FAN

Liquid Injection via CIC is Required

^ C = 208-230/3/60, D = 460/3/60

For 50 cycle capacity, multiply values by .86

A1 PERFORMANCE DATA – R-404A/R-507A

Medium Temperature Models - Bitzer Compressors

Please consult AWEF table on page 109 to confirm DOE compliance per model

R-404A/R-507A		Capacity BTUH @ 90°F Ambient by SST									
Model	Compressor	40°F	35°F	30°F	25°F	20°F	15°F	10°F	0°F	-10°F	-20°F
BCV0150M^ABX	4PES-15Y	189,360	173,520	158,000	143,410	129,580	116,380	103,850	81,850	63,180	47,570
BCV0200M^ABX	4NES-20Y	215,980	198,950	182,350	166,040	150,750	136,250	122,490	97,450	76,320	58,430
BCV0220M^ABX	4JE-22Y	234,830	217,970	200,540	183,460	166,930	151,450	136,840	109,470	85,970	65,780
BCV0250M^ABX	4HE-25Y	267,480	248,910	230,820	212,060	194,000	176,250	159,790	129,150	102,290	79,200
BCV0300M^ABX	4GE-30Y	326,150	301,390	277,290	253,610	231,110	210,150	189,620	152,650	120,820	93,440
BCV0330M^ABX	6JE-33Y	358,800	330,940	303,730	276,760	251,630	227,510	204,870	163,240	127,810	97,590
BCV0350M^ABX	6HE-35Y	402,260	374,340	345,570	316,720	288,980	262,970	237,970	192,030	151,790	117,300
BCV0400M^ABX	6GE-40Y	468,100	433,880	400,270	366,870	335,400	305,230	276,420	223,010	176,890	137,120
BCV0500M^ABX	6FE-50Y	543,930	507,080	471,650	435,260	398,920	364,820	331,560	269,730	214,810	167,150

R-404A/R-507A		Capacity BTUH @ 95°F Ambient by SST									
New Model	Compressor	40°F	35°F	30°F	25°F	20°F	15°F	10°F	0°F	-10°F	-20°F
BCV0150M^ABX	**4PES-15Y**	**180,030**	**164,700**	**150,280**	**136,360**	**123,070**	**110,430**	**98,690**	**77,540**	**59,610**	**44,710**
BCV0200M^ABX	**4NES-20Y**	**204,670**	**189,200**	**173,480**	**158,270**	**143,470**	**129,560**	**116,410**	**92,700**	**72,370**	**55,200**
BCV0220M^ABX	**4JE-22Y**	**222,980**	**206,590**	**190,120**	**174,480**	**158,780**	**144,070**	**130,100**	**103,930**	**81,430**	**62,060**
BCV0250M^ABX	**4HE-25Y**	**253,540**	**236,140**	**219,070**	**201,520**	**184,060**	**167,650**	**151,990**	**122,880**	**97,240**	**75,030**
BCV0300M^ABX	**4GE-30Y**	**309,960**	**286,680**	**263,910**	**241,790**	**220,160**	**200,150**	**180,610**	**145,500**	**114,930**	**88,720**
BCV0330M^ABX	**6JE-33Y**	**341,530**	**315,160**	**289,220**	**263,700**	**239,740**	**217,010**	**194,800**	**155,270**	**121,070**	**91,960**
BCV0350M^ABX	**6HE-35Y**	**381,760**	**355,710**	**327,930**	**301,260**	**274,980**	**250,320**	**226,840**	**182,560**	**144,210**	**111,120**
BCV0400M^ABX	**6GE-40Y**	**444,500**	**412,470**	**380,540**	**349,110**	**319,340**	**291,030**	**263,350**	**212,380**	**168,330**	**130,230**
BCV0500M^ABX	**6FE-50Y**	**516,510**	**482,300**	**447,550**	**413,380**	**379,100**	**346,810**	**315,600**	**257,020**	**204,420**	**158,790**

R-404A/R-507A		Capacity BTUH @ 100°F Ambient by SST									
Model	Compressor	40°F	35°F	30°F	25°F	20°F	15°F	10°F	0°F	-10°F	-20°F
BCV0150M^ABX	4PES-15Y	170,650	156,190	142,510	129,190	116,620	104,600	93,450	73,250	56,110	41,890
BCV0200M^ABX	4NES-20Y	194,470	179,360	164,530	149,850	136,120	123,080	110,530	87,840	68,450	52,050
BCV0220M^ABX	4JE-22Y	210,930	195,660	180,530	165,410	150,550	136,620	123,290	98,360	76,900	58,290
BCV0250M^ABX	4HE-25Y	239,510	223,140	207,330	190,970	174,620	158,910	144,090	116,600	92,060	70,860
BCV0300M^ABX	4GE-30Y	293,680	271,810	250,360	228,900	209,040	190,030	171,580	138,150	109,010	83,940
BCV0330M^ABX	6JE-33Y	324,050	299,210	274,610	250,450	227,480	206,040	184,930	147,090	114,330	86,420
BCV0350M^ABX	6HE-35Y	361,090	335,390	310,660	285,580	260,800	237,510	215,250	173,130	136,560	104,920
BCV0400M^ABX	6GE-40Y	420,830	390,450	360,640	331,090	302,970	276,330	249,630	201,630	159,690	123,290
BCV0500M^ABX	6FE-50Y	485,390	454,040	423,210	391,180	358,850	328,700	299,330	243,910	194,090	150,340

Notes:

^ C = 208-230/3/60, D = 460/3/60

A1 PERFORMANCE DATA – R-404A/R-507A

Medium Temperature Models - Bitzer Compressors (cont.)

Please consult AWEF table on page 109 to confirm DOE compliance per model

R-404A/R-507A		Capacity BTUH @ 110°F Ambient by SST									
Model	Compressor	40°F	35°F	30°F	25°F	20°F	15°F	10°F	0°F	-10°F	-20°F
BCV0150M^ABX	4PES-15Y	151,810	138,980	126,910	114,980	103,690	93,110	82,980	64,740	49,220	36,370
BCV0200M^ABX	4NES-20Y	172,790	159,530	146,440	133,520	121,520	109,580	98,390	78,160	60,640	45,830
BCV0220M^ABX	4JE-22Y	-	174,040	160,410	146,740	133,970	121,760	109,670	87,390	67,850	50,940
BCV0250M^ABX	4HE-25Y	-	-	183,780	169,130	154,670	141,260	128,380	103,470	81,680	62,550
BCV0300M^ABX	4GE-30Y	260,830	241,640	222,600	204,040	186,660	169,640	153,050	123,300	97,090	74,470
BCV0330M^ABX	6JE-33Y	288,610	266,670	245,060	223,270	203,190	183,590	164,900	130,750	100,930	75,430
BCV0350M^ABX	6HE-35Y	-	298,190	275,810	253,900	232,110	211,530	191,700	154,040	121,200	92,500
BCV0400M^ABX	6GE-40Y	372,580	346,420	320,490	294,430	269,780	245,940	222,680	180,000	142,150	109,200
BCV0500M^ABX	6FE-50Y	-	-	373,770	346,020	318,140	291,940	266,580	216,890	172,740	133,210

Notes:
^ C = 208-230/3/60, D = 460/3/60
For 50 cycle capacity, multiply values by .86

A1 PERFORMANCE DATA – R-448A/R-449A

Medium Temperature Models - Bitzer Compressors

Please consult AWEF table on page 109 to confirm DOE compliance per model

R-448A/R-449A		Capacity BTUH @ 90°F Ambient by SST									
Model	Compressor	40°F	35°F	30°F	25°F	20°F	15°F	10°F	0°F	-10°F	-20°F
BCV0150M^ABX	4PES-15Y	185,950	167,980	150,950	135,100	120,130	106,470	93,980	72,170	54,280	39,700
BCV0200M^ABX	4NES-20Y	215,390	195,190	176,270	158,410	141,710	126,320	111,990	86,950	66,350	49,370
BCV0220M^ABX	4JE-22Y	236,480	215,060	195,000	175,910	157,910	141,310	125,520	97,760	74,710	55,350
BCV0250M^ABX	4HE-25Y	272,520	249,170	226,290	204,950	184,690	165,720	148,090	116,230	89,630	67,190
BCV0300M^ABX	4GE-30Y	324,280	295,650	268,220	242,270	218,040	195,250	174,170	136,730	105,490	79,270
BCV0330M^ABX	6JE-33Y	357,290	324,680	293,500	264,050	236,680	210,910	187,070	145,350	110,700	81,880
BCV0350M^ABX	6HE-35Y	407,260	371,350	337,460	305,130	274,600	246,060	219,460	172,100	132,600	99,440
BCV0400M^ABX	6GE-40Y	468,360	428,060	389,160	352,180	317,550	284,770	254,150	200,070	154,760	116,520
BCV0500M^ABX	6FE-50Y	555,680	509,740	464,670	422,050	381,560	343,460	307,800	243,440	188,420	142,010

R-448A/R-449A		Capacity BTUH @ 95°F Ambient by SST									
Model	Compressor	40°F	35°F	30°F	25°F	20°F	15°F	10°F	0°F	-10°F	-20°F
BCV0150M^ABX	**4PES-15Y**	**178,450**	**161,140**	**144,700**	**129,370**	**114,880**	**101,740**	**89,690**	**68,620**	**51,400**	**37,370**
BCV0200M^ABX	**4NES-20Y**	**206,940**	**187,480**	**169,260**	**152,030**	**136,050**	**121,040**	**107,270**	**83,060**	**63,180**	**46,820**
BCV0220M^ABX	**4JE-22Y**	**227,130**	**206,500**	**187,160**	**168,760**	**151,300**	**135,280**	**120,100**	**93,260**	**70,990**	**52,230**
BCV0250M^ABX	**4HE-25Y**	**261,540**	**239,150**	**217,160**	**196,630**	**177,150**	**158,890**	**141,900**	**111,160**	**85,490**	**63,830**
BCV0300M^ABX	**4GE-30Y**	**311,450**	**283,970**	**257,620**	**232,650**	**209,330**	**187,180**	**166,930**	**130,960**	**100,850**	**75,560**
BCV0330M^ABX	**6JE-33Y**	**343,630**	**312,250**	**282,160**	**253,670**	**227,180**	**202,220**	**179,210**	**138,650**	**105,150**	**77,280**
BCV0350M^ABX	**6HE-35Y**	**391,240**	**356,730**	**324,170**	**293,060**	**263,430**	**236,250**	**210,410**	**164,650**	**126,490**	**94,430**
BCV0400M^ABX	**6GE-40Y**	**449,780**	**411,120**	**373,800**	**338,260**	**304,900**	**273,340**	**243,940**	**191,720**	**147,970**	**111,010**
BCV0500M^ABX	**6FE-50Y**	**532,520**	**488,730**	**445,600**	**404,990**	**366,190**	**329,590**	**295,300**	**233,110**	**180,370**	**135,340**

R-448A/R-449A		Capacity BTUH @ 100°F Ambient by SST									
Model	Compressor	40°F	35°F	30°F	25°F	20°F	15°F	10°F	0°F	-10°F	-20°F
BCV0150M^ABX	4PES-15Y	170,990	154,300	138,460	123,680	109,880	97,030	85,440	65,120	48,550	35,070
BCV0200M^ABX	4NES-20Y	198,510	179,770	162,230	145,660	130,260	115,780	102,400	79,150	60,050	44,310
BCV0220M^ABX	4JE-22Y	217,750	198,290	179,320	161,480	144,800	129,330	114,600	88,850	67,270	49,160
BCV0250M^ABX	4HE-25Y	250,510	229,100	207,980	188,330	169,590	152,020	135,570	106,060	81,330	60,460
BCV0300M^ABX	4GE-30Y	298,550	272,210	246,930	222,960	200,520	179,240	159,710	125,170	96,170	71,830
BCV0330M^ABX	6JE-33Y	330,580	299,790	270,790	243,270	217,670	193,520	171,150	132,010	99,610	72,670
BCV0350M^ABX	6HE-35Y	375,190	342,030	310,830	280,760	252,500	226,240	201,350	157,180	120,350	89,380
BCV0400M^ABX	6GE-40Y	431,110	394,050	358,300	324,190	292,220	261,860	233,640	183,230	141,070	105,420
BCV0500M^ABX	6FE-50Y	509,690	467,900	426,670	387,840	350,680	316,020	282,710	222,890	172,070	128,490

Notes:

LOW SUCTION TEMPERATURE APPLICATIONS IN THESE RANGES REQUIRE THE ADDITION OF A HEAD FAN

^ C = 208-230/3/60, D = 460/3/60

For 50 cycle capacity, multiply values by .86

A1 PERFORMANCE DATA – R-448A/R-449A

Medium Temperature Models - Bitzer Compressors (cont.)

Please consult AWEF table on page 109 to confirm DOE compliance per model

R-448A/R-449A		Capacity BTUH @ 110°F Ambient by SST									
Model	Compressor	40°F	35°F	30°F	25°F	20°F	15°F	10°F	0°F	-10°F	-20°F
BCV0150M^ABX	4PES-15Y	156,150	140,780	126,290	112,360	99,500	87,820	77,000	58,250	42,940	30,590
BCV0200M^ABX	4NES-20Y	—	—	148,350	133,060	118,810	105,320	92,990	71,540	53,830	39,360
BCV0220M^ABX	4JE-22Y	—	—	-	147,240	131,800	117,440	103,940	79,900	59,860	43,030
BCV0250M^ABX	4HE-25Y	—	—	-	-	154,310	138,190	123,100	95,840	73,020	53,720
BCV0300M^ABX	4GE-30Y	—	—	225,550	203,730	182,830	163,490	145,310	113,520	86,790	64,280
BCV0330M^ABX	6JE-33Y	—	—	247,940	222,440	198,320	175,980	155,190	118,790	88,590	63,490
BCV0350M^ABX	6HE-35Y	—	—	-	-	230,440	206,190	182,960	142,160	108,000	79,220
BCV0400M^ABX	6GE-40Y	—	—	327,210	295,980	266,630	238,450	212,520	166,180	127,070	93,950
BCV0500M^ABX	6FE-50Y	—	—	-	-	319,370	287,720	257,160	202,100	155,110	114,620

Notes:

LOW SUCTION TEMPERATURE APPLICATIONS IN THESE RANGES REQUIRE THE ADDITION OF A HEAD FAN

^ C = 208-230/3/60, D = 460/3/60

For 50 cycle capacity, multiply values by .86

A1 PERFORMANCE DATA – R-407A/R-407F

Medium Temperature Models - Bitzer Compressors

Please consult AWEF table on page 109 to confirm DOE compliance per model

R-407A/R-407F		Capacity BTUH @ 90°F Ambient by SST									
Model	Compressor	40°F	35°F	30°F	25°F	20°F	15°F	10°F	0°F	-10°F	-20°F
BCV0150M^ABX	4PES-15Y	187,720	170,420	153,860	138,400	123,480	109,960	97,280	75,110	56,520	40,910
BCV0200M^ABX	4NES-20Y	214,480	195,060	176,860	159,550	143,230	128,070	113,690	88,470	67,230	49,300
BCV0220M^ABX	4JE-22Y	233,700	213,180	193,140	174,390	156,680	140,240	124,490	96,370	72,650	52,220
BCV0250M^ABX	4HE-25Y	265,710	242,770	220,560	199,090	179,000	160,180	142,600	110,480	83,300	59,980
BCV0300M^ABX	4GE-30Y	325,660	297,010	269,430	243,160	218,710	195,500	173,840	135,440	102,830	75,030
BCV0330M^ABX	6JE-33Y	355,920	323,750	293,610	264,850	237,580	212,330	188,430	145,780	109,630	78,750
BCV0350M^ABX	6HE-35Y	410,300	375,240	340,800	308,340	277,740	248,900	221,930	172,860	131,280	95,640
BCV0400M^ABX	6GE-40Y	482,990	440,440	400,280	361,950	325,600	291,770	259,370	202,180	153,660	112,130
BCV0500M^ABX	6FE-50Y	561,130	513,110	466,590	422,890	381,240	341,990	305,230	238,180	181,230	132,430

R-407A/R-407F		Capacity BTUH @ 95°F Ambient by SST									
Model	Compressor	40°F	35°F	30°F	25°F	20°F	15°F	10°F	0°F	-10°F	-20°F
BCV0150M^ABX	**4PES-15Y**	**179,870**	**163,220**	**147,290**	**132,370**	**118,070**	**104,950**	**92,840**	**71,370**	**53,410**	**38,450**
BCV0200M^ABX	**4NES-20Y**	**205,540**	**186,860**	**169,390**	**152,730**	**136,990**	**122,400**	**108,680**	**84,250**	**63,780**	**46,530**
BCV0220M^ABX	**4JE-22Y**	**223,800**	**204,090**	**184,810**	**166,770**	**149,700**	**133,810**	**118,540**	**91,640**	**68,680**	**49,030**
BCV0250M^ABX	**4HE-25Y**	**254,320**	**232,270**	**210,950**	**190,560**	**170,950**	**152,810**	**135,840**	**104,880**	**78,730**	**56,220**
BCV0300M^ABX	**4GE-30Y**	**312,580**	**284,980**	**258,450**	**233,150**	**209,530**	**186,940**	**166,220**	**129,180**	**97,720**	**70,880**
BCV0330M^ABX	**6JE-33Y**	**341,010**	**310,070**	**281,060**	**253,270**	**227,080**	**202,680**	**179,630**	**138,490**	**103,650**	**73,940**
BCV0350M^ABX	**6HE-35Y**	**393,150**	**359,490**	**326,980**	**295,210**	**265,760**	**237,970**	**211,950**	**164,620**	**124,580**	**90,260**
BCV0400M^ABX	**6GE-40Y**	**463,310**	**422,450**	**383,850**	**346,910**	**311,910**	**279,160**	**248,110**	**192,960**	**146,000**	**106,020**
BCV0500M^ABX	**6FE-50Y**	**536,600**	**491,670**	**447,010**	**405,030**	**364,980**	**327,160**	**291,540**	**227,040**	**172,150**	**125,190**

R-407A/R-407F		Capacity BTUH @ 100°F Ambient by SST									
Model	Compressor	40°F	35°F	30°F	25°F	20°F	15°F	10°F	0°F	-10°F	-20°F
BCV0150M^ABX	4PES-15Y	171,990	156,020	140,700	126,340	112,680	99,940	88,320	67,650	50,360	36,000
BCV0200M^ABX	4NES-20Y	196,570	178,670	161,890	145,910	130,970	116,710	103,440	80,030	60,360	43,790
BCV0220M^ABX	4JE-22Y	213,930	195,010	176,450	159,160	142,720	127,420	112,820	86,830	64,740	45,860
BCV0250M^ABX	4HE-25Y	242,910	221,810	201,360	181,780	162,920	145,480	129,090	99,290	74,170	52,560
BCV0300M^ABX	4GE-30Y	299,440	272,960	247,380	223,140	200,360	178,710	158,620	122,930	92,640	66,830
BCV0330M^ABX	6JE-33Y	326,090	296,370	268,500	241,800	216,940	193,070	170,750	131,260	97,740	69,180
BCV0350M^ABX	6HE-35Y	375,980	343,780	312,610	282,150	253,790	227,390	201,920	156,450	117,940	84,940
BCV0400M^ABX	6GE-40Y	443,640	404,460	367,390	331,940	298,130	266,670	236,910	183,610	138,410	99,950
BCV0500M^ABX	6FE-50Y	-	470,270	427,480	387,220	348,750	312,170	278,050	215,860	163,110	117,970

Notes:

LOW SUCTION TEMPERATURE APPLICATIONS IN THESE RANGES REQUIRE THE ADDITION OF A HEAD FAN

Liquid Injection via CIC is Required

^ C = 208-230/3/60, D = 460/3/60

For 50 cycle capacity, multiply values by .86

A1 PERFORMANCE DATA – R-407A/R-407F

Medium Temperature Models - Bitzer Compressors (cont.)

Please consult AWEF table on page 109 to confirm DOE compliance per model

R-407A/R-407F		Capacity BTUH @ 110°F Ambient by SST									
Model	Compressor	40°F	35°F	30°F	25°F	20°F	15°F	10°F	0°F	-10°F	-20°F
BCV0150M^ABX	4PES-15Y	156,280	141,640	127,780	114,150	101,670	90,110	79,310	60,250	44,330	31,190
BCV0200M^ABX	4NES-20Y	—	—	146,960	132,290	118,530	105,320	93,180	71,680	53,510	38,360
BCV0220M^ABX	4JE-22Y	—	—	—	144,080	128,930	114,780	101,290	77,370	56,950	39,660
BCV0250M^ABX	4HE-25Y	—	—	—	—	147,030	131,180	115,720	88,500	65,260	45,410
BCV0300M^ABX	4GE-30Y	—	—	225,510	203,490	182,140	162,370	143,560	110,640	82,650	58,880
BCV0330M^ABX	6JE-33Y	—	—	243,600	219,030	196,030	174,000	153,400	116,990	86,100	59,860
BCV0350M^ABX	6HE-35Y	—	—	—	—	230,100	205,760	182,130	140,310	104,820	74,500
BCV0400M^ABX	6GE-40Y	—	—	—	302,070	271,270	241,600	214,260	165,200	123,460	88,060
BCV0500M^ABX	6FE-50Y	—	—	—	—	316,470	282,880	251,380	194,020	145,380	103,860

Notes:

LOW SUCTION TEMPERATURE APPLICATIONS IN THESE RANGES REQUIRE THE ADDITION OF A HEAD FAN

Liquid Injection via CIC is Required

^ C = 208-230/3/60, D = 460/3/60

For 50 cycle capacity, multiply values by .86

A1 PERFORMANCE DATA – R-407C

Medium Temperature Models - Bitzer Compressors

Please consult AWEF table on page 109 to confirm DOE compliance per model

R-407C		Capacity BTUH @ 90°F Ambient by SST									
Model	Compressor	40°F	35°F	30°F	25°F	20°F	15°F	10°F	0°F	-10°F	-20°F
BCV0150M^ABX	4PES-15Y	169,460	152,840	137,430	123,100	109,570	97,280	85,780	65,630	48,370	—
BCV0200M^ABX	4NES-20Y	194,600	176,320	158,750	142,590	127,500	113,490	100,490	77,480	57,770	—
BCV0220M^ABX	4JE-22Y	215,710	195,330	175,930	157,460	140,450	124,650	109,970	83,630	61,110	—
BCV0250M^ABX	4HE-25Y	251,190	228,100	206,020	184,950	165,450	147,330	130,460	99,970	73,650	—
BCV0300M^ABX	4GE-30Y	305,860	277,560	250,600	225,430	201,590	179,560	159,000	122,710	91,490	—
BCV0330M^ABX	6JE-33Y	318,280	288,320	259,880	233,150	208,310	185,210	163,700	125,930	93,530	—
BCV0350M^ABX	6HE-35Y	370,300	335,910	303,730	273,360	245,180	218,590	193,840	150,030	112,630	—
BCV0400M^ABX	6GE-40Y	442,230	401,950	363,580	327,800	293,830	262,240	233,290	181,610	137,510	—
BCV0500M^ABX	6FE-50Y	511,350	464,440	420,180	378,540	339,430	303,300	269,120	208,880	157,240	—

R-407C		Capacity BTUH @ 95°F Ambient by SST									
Model	Compressor	40°F	35°F	30°F	25°F	20°F	15°F	10°F	0°F	-10°F	-20°F
BCV0150M^ABX	**4PES-15Y**	**162,460**	**146,690**	**131,800**	**117,940**	**104,860**	**93,040**	**81,930**	**62,480**	**45,870**	—
BCV0200M^ABX	**4NES-20Y**	**186,970**	**169,300**	**152,350**	**136,740**	**122,200**	**108,690**	**96,230**	**73,930**	**54,970**	—
BCV0220M^ABX	**4JE-22Y**	**207,250**	**187,600**	**168,830**	**150,970**	**134,670**	**119,330**	**104,950**	**79,560**	**57,780**	—
BCV0250M^ABX	**4HE-25Y**	**241,570**	**219,280**	**197,970**	**177,850**	**158,740**	**141,190**	**124,860**	**95,400**	**-**	—
BCV0300M^ABX	**4GE-30Y**	**294,910**	**267,560**	**241,510**	**217,170**	**194,070**	**172,800**	**152,810**	**117,600**	**87,360**	—
BCV0330M^ABX	**6JE-33Y**	**305,850**	**276,990**	**249,550**	**224,020**	**199,780**	**177,590**	**156,720**	**120,320**	**89,060**	—
BCV0350M^ABX	**6HE-35Y**	**356,020**	**322,880**	**291,870**	**262,600**	**235,430**	**209,680**	**185,990**	**143,810**	**107,700**	—
BCV0400M^ABX	**6GE-40Y**	**426,090**	**387,300**	**350,270**	**315,760**	**282,920**	**252,500**	**224,500**	**174,670**	**132,170**	—
BCV0500M^ABX	**6FE-50Y**	**491,620**	**446,360**	**403,970**	**363,860**	**326,190**	**291,320**	**258,470**	**200,280**	**150,560**	—

R-407C		Capacity BTUH @ 100°F Ambient by SST									
Model	Compressor	40°F	35°F	30°F	25°F	20°F	15°F	10°F	0°F	-10°F	-20°F
BCV0150M^ABX	4PES-15Y	155,990	140,530	126,160	112,790	100,260	88,780	78,050	59,340	43,390	—
BCV0200M^ABX	4NES-20Y	179,290	162,280	146,140	130,890	116,990	103,850	91,860	70,360	52,150	—
BCV0220M^ABX	4JE-22Y	198,880	179,850	161,770	144,460	128,590	113,920	100,010	75,520	54,480	—
BCV0250M^ABX	4HE-25Y	231,970	210,460	189,910	170,210	152,050	135,090	119,100	90,850	-	—
BCV0300M^ABX	4GE-30Y	283,880	257,520	232,360	208,820	186,490	165,840	146,620	112,540	83,170	—
BCV0330M^ABX	6JE-33Y	293,400	265,600	239,160	214,560	190,940	169,600	149,820	114,640	84,610	—
BCV0350M^ABX	6HE-35Y	341,750	309,800	279,970	251,610	225,490	200,820	178,120	137,470	102,750	—
BCV0400M^ABX	6GE-40Y	409,820	372,480	336,850	303,600	272,000	242,930	215,690	167,790	126,790	—
BCV0500M^ABX	6FE-50Y	472,160	428,530	387,780	349,150	313,250	279,300	247,520	191,640	143,860	—

Notes:
^ C = 208-230/3/60, D = 460/3/60
For 50 cycle capacity, multiply values by .86

A1 PERFORMANCE DATA – R-407C

Medium Temperature Models - Bitzer Compressors (cont.)

Please consult AWEF table on page 109 to confirm DOE compliance per model

R-407C		Capacity BTUH @ 110°F Ambient by SST									
Model	Compressor	40°F	35°F	30°F	25°F	20°F	15°F	10°F	0°F	-10°F	-20°F
BCV0150M^ABX	4PES-15Y	142,280	128,170	114,940	102,300	90,830	80,090	70,240	53,020	38,340	—
BCV0200M^ABX	4NES-20Y	164,020	148,240	133,100	119,170	106,280	94,160	83,060	63,280	-	—
BCV0220M^ABX	4JE-22Y	—	164,440	147,630	131,650	117,080	103,170	90,450	67,600	47,910	—
BCV0250M^ABX	4HE-25Y	—	-—	173,750	155,480	138,650	123,100	108,320	81,760	58,920	—
BCV0300M^ABX	4GE-30Y	261,950	237,520	214,120	192,130	171,370	152,120	134,330	102,480	74,990	—
BCV0330M^ABX	6JE-33Y	268,970	242,750	218,290	195,490	173,840	153,840	135,670	103,310	75,690	—
BCV0350M^ABX	6HE-35Y	—	283,350	255,920	229,980	205,850	183,010	161,950	124,740	92,760	—
BCV0400M^ABX	6GE-40Y	377,380	342,940	309,970	279,220	250,010	223,190	198,000	153,800	116,040	—
BCV0500M^ABX	6FE-50Y	—	—	355,140	319,530	286,420	255,070	225,940	174,540	130,510	—

Notes:

LOW SUCTION TEMPERATURE APPLICATIONS IN THESE RANGES REQUIRE THE ADDITION OF A HEAD FAN

^ C = 208-230/3/60, D = 460/3/60

For 50 cycle capacity, multiply values by .86

A1 PERFORMANCE DATA – R-404A/R-507A

Low Temperature Models - Bitzer Compressors

Please consult AWEF table on page 109 to confirm DOE compliance per model

R-404A/R-507A		Capacity BTUH @ 90°F Ambient by SST								
Model	Compressor	0°F	-5°F	-10°F	-15°F	-20°F	-25°F	-30°F	-35°F	-40°F
BCV0130L^ABX	4JE-15Y	111,700	99,550	88,240	77,820	68,080	59,100	50,830	43,160	36,110
BCV0150L^ABX	4HE-18Y	130,850	116,930	104,020	92,030	80,820	70,460	60,920	52,020	43,840
BCV0200L^ABX	4GE-23Y	150,080	135,040	120,600	107,140	94,550	82,950	72,110	62,060	52,700
BCV0220L^ABX	6JE-25Y	156,840	140,330	125,240	111,010	97,500	85,120	73,610	62,920	52,930
BCV0250L^ABX	6HE-28Y	181,490	163,270	146,260	130,210	114,810	100,460	87,310	74,940	63,430
BCV0300L^ABX	6GE-34Y	206,290	187,800	169,700	152,590	136,200	120,680	105,990	91,950	78,960
BCV0400L^ABX	6FE-44Y	263,440	237,840	213,680	190,230	168,160	147,500	128,430	110,460	93,670

R-404A/R-507A		Capacity BTUH @ 95°F Ambient by SST								
Model	Compressor	0°F	-5°F	-10°F	-15°F	-20°F	-25°F	-30°F	-35°F	-40°F
BCV0130L^ABX	**4JE-15Y**	**106,180**	**94,630**	**83,910**	**73,820**	**64,480**	**55,800**	**47,880**	**40,560**	**33,800**
BCV0150L^ABX	**4HE-18Y**	**124,540**	**111,350**	**98,920**	**87,460**	**76,740**	**66,810**	**57,670**	**49,130**	**41,290**
BCV0200L^ABX	**4GE-23Y**	**142,820**	**128,550**	**114,820**	**101,980**	**90,060**	**78,880**	**68,530**	**58,910**	**49,960**
BCV0220L^ABX	**6JE-25Y**	**148,940**	**133,250**	**118,810**	**105,050**	**92,220**	**80,400**	**69,370**	**59,050**	**49,540**
BCV0250L^ABX	**6HE-28Y**	**172,230**	**154,950**	**138,800**	**123,490**	**108,920**	**95,060**	**82,500**	**70,650**	**59,550**
BCV0300L^ABX	**6GE-34Y**	**195,540**	**178,190**	**161,120**	**144,970**	**129,440**	**114,680**	**100,570**	**87,250**	**74,820**
BCV0400L^ABX	**6FE-44Y**	**250,470**	**226,260**	**203,330**	**180,850**	**159,870**	**140,240**	**121,820**	**104,520**	**88,330**

R-404A/R-507A		Capacity BTUH @ 100°F Ambient by SST								
Model	Compressor	0°F	-5°F	-10°F	-15°F	-20°F	-25°F	-30°F	-35°F	-40°F
BCV0130L^ABX	4JE-15Y	100,840	89,690	79,470	69,830	60,890	52,610	44,980	37,970	31,500
BCV0150L^ABX	4HE-18Y	118,160	105,560	93,790	82,880	72,650	63,160	54,360	46,260	38,760
BCV0200L^ABX	4GE-23Y	135,510	121,980	109,130	96,780	85,460	74,790	64,950	55,770	47,240
BCV0220L^ABX	6JE-25Y	140,870	126,110	112,540	99,360	87,090	75,690	65,140	55,260	46,170
BCV0250L^ABX	6HE-28Y	162,880	146,550	131,280	116,720	102,720	89,790	77,680	66,350	55,720
BCV0300L^ABX	6GE-34Y	184,560	168,420	152,390	137,210	122,790	108,440	95,170	82,590	70,620
BCV0400L^ABX	6FE-44Y	237,350	214,530	192,780	171,390	151,480	132,760	115,130	98,520	82,830

R-404A/R-507A		Capacity BTUH @ 110°F Ambient by SST								
Model	Compressor	0°F	-5°F	-10°F	-15°F	-20°F	-25°F	-30°F	-35°F	-40°F
BCV0130L^ABX	4JE-15Y	89,750	79,930	70,600	61,870	53,720	46,150	39,250	32,870	26,970
BCV0150L^ABX	4HE-18Y	105,390	94,040	83,650	73,720	64,480	55,820	47,910	40,570	33,770
BCV0200L^ABX	4GE-23Y	120,900	108,810	97,180	86,440	76,200	66,670	57,820	49,560	41,820
BCV0220L^ABX	6JE-25Y	124,640	111,770	99,330	87,610	76,680	66,360	56,690	47,790	39,540
BCV0250L^ABX	6HE-28Y	143,650	129,650	116,350	103,180	90,700	79,000	68,060	57,700	48,120
BCV0300L^ABX	6GE-34Y	-	148,590	134,640	121,410	108,700	96,230	84,250	72,890	62,060
BCV0400L^ABX	6FE-44Y	210,640	190,640	171,040	152,410	134,640	117,620	101,590	86,330	71,960

Notes:

LOW SUCTION TEMPERATURE APPLICATIONS IN THESE RANGES REQUIRE THE ADDITION OF A HEAD FAN

^ C = 208-230/3/60, D = 460/3/60

For 50 cycle capacity, multiply values by .86

A1 PERFORMANCE DATA – R-448A/R-449A

Low Temperature Models - Bitzer Compressors

Please consult AWEF table on page 109 to confirm DOE compliance per model

R-448A/R-449A		Capacity BTUH @ 90°F Ambient by SST								
Model	Compressor	0°F	-5°F	-10°F	-15°F	-20°F	-25°F	-30°F	-35°F	-40°F
BCV0130L^ABX	4JE-15Y	100,830	88,480	77,320	67,020	57,620	49,050	41,210	34,030	27,430
BCV0150L^ABX	4HE-18Y	118,460	104,430	91,470	79,640	68,760	58,820	49,770	41,390	33,690
BCV0200L^ABX	4GE-23Y	137,410	121,420	106,910	93,420	81,120	69,800	59,460	49,910	41,050
BCV0220L^ABX	6JE-25Y	143,770	126,760	111,160	96,570	83,330	71,210	60,160	49,920	40,520
BCV0250L^ABX	6HE-28Y	167,600	148,280	130,440	113,730	98,450	84,510	71,690	59,860	48,860
BCV0300L^ABX	6GE-34Y	195,570	174,760	155,190	136,860	119,650	103,680	88,960	75,380	62,650
BCV0400L^ABX	6FE-44Y	243,340	215,940	190,280	166,410	144,410	124,270	105,710	88,490	72,520

R-448A/R-449A		Capacity BTUH @ 95°F Ambient by SST								
Model	Compressor	0°F	-5°F	-10°F	-15°F	-20°F	-25°F	-30°F	-35°F	-40°F
BCV0130L^ABX	**4JE-15Y**	**96,440**	**84,550**	**73,760**	**63,810**	**54,710**	**46,380**	**38,850**	**31,920**	**25,550**
BCV0150L^ABX	**4HE-18Y**	**113,570**	**99,950**	**87,430**	**76,020**	**65,520**	**55,930**	**47,160**	**39,110**	**31,680**
BCV0200L^ABX	**4GE-23Y**	**131,790**	**116,440**	**102,430**	**89,440**	**77,580**	**66,690**	**56,720**	**47,520**	**38,980**
BCV0220L^ABX	**6JE-25Y**	**137,490**	**121,050**	**105,930**	**91,810**	**79,060**	**67,360**	**56,630**	**46,810**	**37,760**
BCV0250L^ABX	**6HE-28Y**	**160,480**	**141,620**	**124,500**	**108,350**	**93,610**	**80,180**	**67,810**	**56,390**	**45,760**
BCV0300L^ABX	**6GE-34Y**	**187,340**	**167,290**	**148,560**	**131,040**	**114,450**	**99,040**	**84,910**	**71,710**	**-**
BCV0400L^ABX	**6FE-44Y**	**233,410**	**207,030**	**182,120**	**159,220**	**137,920**	**118,440**	**100,430**	**83,700**	**68,070**

R-448A/R-449A		Capacity BTUH @ 100°F Ambient by SST								
Model	Compressor	0°F	-5°F	-10°F	-15°F	-20°F	-25°F	-30°F	-35°F	-40°F
BCV0130L^ABX	4JE-15Y	92,100	80,600	70,200	60,590	51,810	43,760	36,490	29,810	23,680
BCV0150L^ABX	4HE-18Y	108,590	95,460	83,490	72,420	62,290	53,050	44,590	36,840	-
BCV0200L^ABX	4GE-23Y	126,160	111,550	97,940	85,450	74,070	63,580	54,000	45,150	-
BCV0220L^ABX	6JE-25Y	131,230	115,360	100,610	87,080	74,810	63,520	53,180	43,720	-
BCV0250L^ABX	6HE-28Y	152,910	135,050	118,550	103,130	88,770	75,830	63,910	52,900	-
BCV0300L^ABX	6GE-34Y	178,960	159,930	141,960	125,130	109,060	94,330	80,730	67,970	-
BCV0400L^ABX	6FE-44Y	223,430	198,050	174,120	151,950	131,380	112,550	95,090	78,850	-

R-448A/R-449A		Capacity BTUH @ 110°F Ambient by SST								
Model	Compressor	0°F	-5°F	-10°F	-15°F	-20°F	-25°F	-30°F	-35°F	-40°F
BCV0130L^ABX	4JE-15Y	83,460	72,890	63,140	54,200	45,990	38,570	31,810	25,660	-
BCV0150L^ABX	4HE-18Y	98,720	86,550	75,490	65,250	55,880	47,330	39,510	32,350	-
BCV0200L^ABX	4GE-23Y	114,960	101,530	89,020	77,610	67,080	57,450	48,590	40,490	-
BCV0220L^ABX	6JE-25Y	118,760	104,140	90,540	77,900	66,420	55,870	46,340	-	-
BCV0250L^ABX	6HE-28Y	138,360	122,110	106,640	92,280	79,210	67,150	56,110	-	-
BCV0300L^ABX	6GE-34Y	-	-	128,530	113,090	98,440	-	-	-	-
BCV0400L^ABX	6FE-44Y	203,650	179,970	158,000	137,280	118,320	100,640	84,310	-	-

Notes:
Head Fan Required For All Operating Conditions
Maximum Suction Gas Superheat < =35F
^ C = 208-230/3/60, D = 460/3/60
For 50 cycle capacity, multiply values by .86

A1 PERFORMANCE DATA – R-407A/R-407F

Low Temperature Models - Bitzer Compressors

Please consult AWEF table on page 109 to confirm DOE compliance per model

R-407A/R-407F		Capacity BTUH @ 90°F Ambient by SST								
Model	Compressor	0°F	-5°F	-10°F	-15°F	-20°F	-25°F	-30°F	-35°F	-40°F
BCV0130L^ABX	4JE-15Y	98,060	85,580	74,180	63,520	53,670	44,560	36,200	28,440	21,230
BCV0150L^ABX	4HE-18Y	116,360	101,930	88,590	76,320	64,870	54,300	44,510	35,440	26,970
BCV0200L^ABX	4GE-23Y	136,640	120,270	105,260	91,150	78,180	66,110	54,930	44,490	34,690
BCV0220L^ABX	6JE-25Y	139,380	122,320	106,260	91,320	77,530	64,620	52,580	41,390	30,910
BCV0250L^ABX	6HE-28Y	165,720	146,000	127,650	110,210	93,870	78,920	64,950	51,810	39,540
BCV0300L^ABX	6GE-34Y	185,790	163,950	143,750	124,780	106,740	89,790	74,260	59,540	45,620
BCV0400L^ABX	6FE-44Y	236,410	208,340	181,710	157,070	134,320	113,110	93,490	75,160	57,910

R-407A/R-407F		Capacity BTUH @ 95°F Ambient by SST								
Model	Compressor	0°F	-5°F	-10°F	-15°F	-20°F	-25°F	-30°F	-35°F	-40°F
BCV0130L^ABX	**4JE-15Y**	**93,350**	**81,420**	**70,340**	**60,080**	**50,610**	**41,850**	**33,850**	**26,420**	**19,540**
BCV0150L^ABX	**4HE-18Y**	**111,020**	**97,130**	**84,350**	**72,430**	**61,420**	**51,260**	**41,880**	**33,180**	**25,110**
BCV0200L^ABX	**4GE-23Y**	**130,760**	**115,010**	**100,470**	**86,900**	**74,430**	**62,810**	**52,080**	**42,080**	**32,700**
BCV0220L^ABX	**6JE-25Y**	**132,580**	**116,350**	**100,780**	**86,270**	**73,050**	**60,570**	**49,110**	**38,410**	**28,460**
BCV0250L^ABX	**6HE-28Y**	**157,960**	**138,990**	**121,260**	**104,440**	**88,910**	**74,480**	**61,080**	**48,490**	**36,760**
BCV0300L^ABX	**6GE-34Y**	**176,640**	**156,080**	**136,650**	**118,340**	**100,970**	**84,890**	**69,890**	**55,810**	**42,510**
BCV0400L^ABX	**6FE-44Y**	**225,800**	**198,730**	**173,030**	**149,370**	**127,460**	**107,110**	**88,290**	**70,720**	**54,260**

R-407A/R-407F		Capacity BTUH @ 100°F Ambient by SST								
Model	Compressor	0°F	-5°F	-10°F	-15°F	-20°F	-25°F	-30°F	-35°F	-40°F
BCV0130L^ABX	4JE-15Y	88,690	77,200	66,550	56,670	47,580	39,180	31,520	24,450	17,880
BCV0150L^ABX	4HE-18Y	105,850	92,360	80,070	68,600	58,020	48,280	39,280	30,970	23,270
BCV0200L^ABX	4GE-23Y	124,910	109,780	95,770	82,710	70,720	59,560	49,280	39,700	30,740
BCV0220L^ABX	6JE-25Y	125,860	110,180	95,390	81,460	68,640	56,680	45,700	35,490	26,020
BCV0250L^ABX	6HE-28Y	150,280	132,000	114,990	98,830	83,950	70,090	57,270	45,240	34,050
BCV0300L^ABX	6GE-34Y	168,040	148,320	129,660	112,040	95,370	79,980	65,630	52,090	39,460
BCV0400L^ABX	6FE-44Y	215,290	189,150	164,760	141,760	120,730	101,180	83,160	66,300	50,690

R-407A/R-407F		Capacity BTUH @ 110°F Ambient by SST								
Model	Compressor	0°F	-5°F	-10°F	-15°F	-20°F	-25°F	-30°F	-35°F	-40°F
BCV0130L^ABX	4JE-15Y	79,510	68,950	59,120	50,030	41,640	33,990	27,010	20,610	14,670
BCV0150L^ABX	4HE-18Y	95,380	82,980	71,680	61,110	51,390	42,420	34,240	26,680	19,720
BCV0200L^ABX	4GE-23Y	113,440	99,590	86,550	74,590	63,500	53,260	43,850	35,120	26,970
BCV0220L^ABX	6JE-25Y	112,690	98,000	84,410	71,840	60,080	49,120	39,130	29,910	21,330
BCV0250L^ABX	6HE-28Y	135,260	118,450	102,780	87,910	74,310	61,620	49,910	38,960	28,840
BCV0300L^ABX	6GE-34Y	-	133,160	116,230	99,760	84,640	70,490	57,390	45,070	33,630
BCV0400L^ABX	6FE-44Y	194,920	170,320	147,960	127,080	107,660	89,740	73,270	57,920	43,720

Notes:
Liquid Injection via CIC is Required
Head Fan Required for All Operating Conditions
^ C = 208-230/3/60, D = 460/3/60
For 50 cycle capacity, multiply values by .86

A1 PERFORMANCE DATA – R-407C

Low Temperature Models - Bitzer Compressors

Please consult AWEF table on page 109 to confirm DOE compliance per model

R-407C		Capacity BTUH @ 90°F Ambient by SST								
Model	Compressor	0°F	-5°F	-10°F	-15°F	-20°F	-25°F	-30°F	-35°F	-40°F
BCV0130L^ABX	4JE-15Y	85,150	73,620	62,980	-	-	-	-	-	-
BCV0150L^ABX	4HE-18Y	101,490	88,140	75,830	-	-	-	-	-	-
BCV0200L^ABX	4GE-23Y	116,320	101,060	87,160	-	-	-	-	-	-
BCV0220L^ABX	6JE-25Y	121,980	105,980	90,780	-	-	-	-	-	-
BCV0250L^ABX	6HE-28Y	145,700	126,840	109,290	-	-	-	-	-	-
BCV0300L^ABX	6GE-34Y	164,930	143,710	124,270	-	-	-	-	-	-
BCV0400L^ABX	6FE-44Y	209,620	182,470	157,650	-	-	-	-	-	-

R-407C		Capacity BTUH @ 95°F Ambient by SST								
Model	Compressor	0°F	-5°F	-10°F	-15°F	-20°F	-25°F	-30°F	-35°F	-40°F
BCV0130L^ABX	**4JE-15Y**	**81,190**	**70,040**	**59,720**	-	-	-	-	-	-
BCV0150L^ABX	**4HE-18Y**	**97,010**	**84,100**	**72,090**	-	-	-	-	-	-
BCV0200L^ABX	**4GE-23Y**	**111,210**	**96,420**	**82,980**	-	-	-	-	-	-
BCV0220L^ABX	**6JE-25Y**	**116,190**	**100,660**	**86,100**	-	-	-	-	-	-
BCV0250L^ABX	**6HE-28Y**	**138,950**	**120,800**	**103,930**	-	-	-	-	-	-
BCV0300L^ABX	**6GE-34Y**	**157,500**	**136,850**	**118,140**	-	-	-	-	-	-
BCV0400L^ABX	**6FE-44Y**	**200,580**	**174,410**	**150,250**	-	-	-	-	-	-

R-407C		Capacity BTUH @ 100°F Ambient by SST								
Model	Compressor	0°F	-5°F	-10°F	-15°F	-20°F	-25°F	-30°F	-35°F	-40°F
BCV0130L^ABX	4JE-15Y	77,260	66,380	56,470	-	-	-	-	-	-
BCV0150L^ABX	4HE-18Y	92,640	80,060	68,420	-	-	-	-	-	-
BCV0200L^ABX	4GE-23Y	106,260	91,930	78,820	-	-	-	-	-	-
BCV0220L^ABX	6JE-25Y	110,440	95,250	81,380	-	-	-	-	-	-
BCV0250L^ABX	6HE-28Y	132,410	114,850	98,530	-	-	-	-	-	-
BCV0300L^ABX	6GE-34Y	149,860	130,130	112,050	-	-	-	-	-	-
BCV0400L^ABX	6FE-44Y	191,550	166,330	142,880	-	-	-	-	-	-

R-407C		Capacity BTUH @ 110°F Ambient by SST								
Model	Compressor	0°F	-5°F	-10°F	-15°F	-20°F	-25°F	-30°F	-35°F	-40°F
BCV0130L^ABX	4JE-15Y	69,450	59,290	50,060	-	-	-	-	-	-
BCV0150L^ABX	4HE-18Y	83,780	72,040	-	-	-	-	-	-	-
BCV0200L^ABX	4GE-23Y	-	-	-	-	-	-	-	-	-
BCV0220L^ABX	6JE-25Y	-	-	-	-	-	-	-	-	-
BCV0250L^ABX	6HE-28Y	-	-	-	-	-	-	-	-	-
BCV0300L^ABX	6GE-34Y	-	-	-	-	-	-	-	-	-
BCV0400L^ABX	6FE-44Y	-	-	-	-	-	-	-	-	-

Notes:

Head Fan Required

^ C = 208-230/3/60, D = 460/3/60

For 50 cycle capacity, multiply values by .86

A2L UNIT SPECIFICATIONS

Medium & Low Temperature Models - Bitzer Semi-Hermetic Compressors

Please consult AWEF table on page 109 to confirm DOE compliance per model

Model	Compressor	Refrigerant Line Connections (OD)		Rec. Capacity @90%	Condenser Fan Data		Dimensions (In.)			Net Wt.
		Liquid	Suction	Std	No. Fans	Dia.	Length	Width	Height	(lbs.)
BCV0130L^ABV	4JE-15Y	1-1/8	1-5/8	123	2	30"	170.7	48.9	53.9	2,000
BCV0150L^ABV	4HE-18Y	1-1/8	1-5/8	123	2	30"	170.7	48.9	53.9	2,030
BCV0200L^ABV	4GE-23Y	1-1/8	2-1/8	123	2	30"	170.7	48.9	53.9	2,070
BCV0220L^ABV	6JE-25Y	1-1/8	2-1/8	123	2	30"	170.7	48.9	53.9	2,140
BCV0250L^ABV	6HE-28Y	1-1/8	2-1/8	123	2	30"	170.7	48.9	53.9	2,140
BCV0300L^ABV	6GE-34Y	1-1/8	2-1/8	123	2	30"	170.7	48.9	53.9	2,150
BCV0400L^ABV	6FE-44Y	1-1/8	2-1/8	188	3	30"	225.7	48.9	53.9	2,660
BCV0150M^ABV	4PES-15Y	1-1/8	1-5/8	123	2	30"	170.7	48.9	53.9	1,900
BCV0200M^ABV	4NES-20Y	1-1/8	2-1/8	123	2	30"	170.7	48.9	53.9	1,950
BCV0220M^ABV	4JE-22Y	1-1/8	2-1/8	123	2	30"	170.7	48.9	53.9	2,040
BCV0250M^ABV	4HE-25Y	1-1/8	2-1/8	123	2	30"	170.7	48.9	53.9	2,070
BCV0300M^ABV	4GE-30Y	1-1/8	2-1/8	188	3	30"	225.7	48.9	53.9	2,560
BCV0330M^ABV	6JE-33Y	1-1/8	2-1/8	188	3	30"	225.7	48.9	53.9	2,610
BCV0350M^ABV	6HE-35Y	1-1/8	2-1/8	188	3	30"	225.7	48.9	53.9	2,620
BCV0400M^ABV	6GE-40Y	1-1/8	2-1/8	188	4	30"	280.1	48.9	55.9	3,050
BCV0500M^ABV	6FE-50Y	1-1/8	2-5/8	188	4	30"	280.1	48.9	55.9	3,070

Notes:
^ C = 208-230/3/60, D = 460/3/60

A1 UNIT SPECIFICATIONS

Medium & Low Temperature Models - Bitzer Compressors

Please consult AWEF table on page 109 to confirm DOE compliance per model

Model	Compressor	Refrigerant Line Connections (OD)		Rec. Capacity @90%	Condenser Fan Data		Dimensions (In.)			Net Wt.
		Liquid	Suction	Std	No. Fans	Dia.	Length	Width	Height	(lbs.)
BCV0150M^ABX	4PES-15Y	1-1/8	1-5/8	123	2	30"	170.7	48.9	53.9	1,850
BCV0200M^ABX	4NES-20Y	1-1/8	2-1/8	123	2	30"	170.7	48.9	53.9	1,900
BCV0220M^ABX	4JE-22Y	1-1/8	2-1/8	123	2	30"	170.7	48.9	53.9	1,990
BCV0250M^ABX	4HE-25Y	1-1/8	2-1/8	123	2	30"	170.7	48.9	53.9	2,020
BCV0300M^ABX	4GE-30Y	1-1/8	2-1/8	188	3	30"	225.7	48.9	53.9	2,510
BCV0330M^ABX	6JE-33Y	1-1/8	2-1/8	188	3	30"	225.7	48.9	53.9	2,560
BCV0350M^ABX	6HE-35Y	1-1/8	2-1/8	188	3	30"	225.7	48.9	53.9	2,570
BCV0400M^ABX	6GE-40Y	1-1/8	2-1/8	188	4	30"	280.1	48.9	55.9	3,000
BCV0500M^ABX	6FE-50Y	1-1/8	2-5/8	188	4	30"	280.1	48.9	55.9	3,010
BCV0130L^ABX	4JE-15Y	1-1/8	1-5/8	123	2	30"	170.7	48.9	53.9	1,950
BCV0150L^ABX	4HE-18Y	1-1/8	1-5/8	123	2	30"	170.7	48.9	53.9	1,960
BCV0200L^ABX	4GE-23Y	1-1/8	2-1/8	123	2	30"	170.7	48.9	53.9	2,020
BCV0220L^ABX	6JE-25Y	1-1/8	2-1/8	123	2	30"	170.7	48.9	53.9	2,070
BCV0250L^ABX	6HE-28Y	1-1/8	2-1/8	123	2	30"	170.7	48.9	53.9	2,090
BCV0300L^ABX	6GE-34Y	1-1/8	2-1/8	123	2	30"	170.7	48.9	53.9	2,100
BCV0400L^ABX	6FE-44Y	1-1/8	2-1/8	188	3	30"	225.7	48.9	53.9	2,610

Notes:
^ C = 208-230/3/60, D = 460/3/60

A2L ELECTRICAL DATA

Medium Temperature Models - Bitzer Semi-Hermetic Compressors/208-230V

Please consult AWEF table on page 109 to confirm DOE compliance per model

Model	Compressor	Compressor		Condenser		Air Defrost		Remote Loads: Four Contactors							
								Low Amps "4L"				High Amps "4H"			
		RLA	LRA	No. Fans	FLA (Total)	MCA	MOPD	Evap. Fan Amps	Defrost Htrs. Amps	Electric Defrost MCA	Electric Defrost MOPD	Evap. Fan Amps	Defrost Htrs. Amps	Electric Defrost MCA	Electric Defrost MOPD
BCV0150MCABV	4PES-15Y	48.7	294.0	2	7.0	67.9	110	25	96	120.0	125	25	108	135.0	150
BCV0200MCABV	4NES-20Y	57.7	352.0	2	7.0	79.1	125	25	96	120.0	150	25	108	135.0	150
BCV0220MCABV	4JE-22Y	61.5	352.0	2	7.0	83.9	125	25	96	120.0	150	25	108	135.0	150
BCV0250MCABV	4HE-25Y	75.6	436.0	2	7.0	101.5	175	25	125	156.3	200	30	181	226.3	250
BCV0300MCABV	4GE-30Y	89.7	490.0	3	10.5	122.6	200	30	149	186.3	225	30	181	226.3	250
BCV0330MCABV	6JE-33Y	100.0	550.0	3	10.5	135.5	225	30	149	186.3	250	30	181	226.3	250
BCV0350MCABV	6HE-35Y	105.1	550.0	3	10.5	141.9	225	35	160	200.0	250	35	192	240.0	250
BCV0400MCABV	6GE-40Y	141.0	700.0	4	14.0	190.3	300	35	160	225.3	350	35	192	240.0	350
BCV0500MCABV	6FE-50Y	143.6	950.0	4	14.0	193.5	300	35	160	228.5	350	35	192	240.0	350

Model	Compressor	Compressor		Condenser		Air Defrost		Remote Loads: Three Contactors							
								Low Amps "3L"				High Amps "3H"			
		RLA	LRA	No. Fans	FLA (Total)	MCA	MOPD	Evap. Fan Amps	Defrost Htrs. Amps	Electric Defrost MCA	Electric Defrost MOPD	Evap. Fan Amps	Defrost Htrs. Amps	Electric Defrost MCA	Electric Defrost MOPD
BCV0150MCABV	4PES-15Y	48.7	294.0	2	7.0	67.9	110	25	96	120.0	125	25	96	120.0	125
BCV0200MCABV	4NES-20Y	57.7	352.0	2	7.0	79.1	125	25	96	120.0	150	25	96	120.0	150
BCV0220MCABV	4JE-22Y	61.5	352.0	2	7.0	83.9	125	22	96	120.0	150	25	96	120.0	150
BCV0250MCABV	4HE-25Y	75.6	436.0	2	7.0	101.5	175	20	96	121.5	175	25	120	150.0	200
BCV0300MCABV	4GE-30Y	89.7	490.0	3	10.5	122.6	200	25	125	156.3	225	20	125	156.3	225
BCV0330MCABV	6JE-33Y	100.0	550.0	3	10.5	135.5	225	25	125	160.5	250	20	125	156.3	250
BCV0350MCABV	6HE-35Y	105.1	550.0	3	10.5	141.9	225	30	130	171.9	250	35	144	180.0	250
BCV0400MCABV	6GE-40Y	141.0	700.0	4	14.0	190.3	300	30	130	220.3	350	30	144	220.3	350
BCV0500MCABV	6FE-50Y	143.6	950.0	4	14.0	193.5	300	30	130	223.5	350	30	144	223.5	350

Notes:
MCA = Minimum Circuit Ampacity
MOP = Maximum Overcurrent Protection

intelliGen™ and Air Defrost Units do not carry any of the evaporator fan or heater loads.
Power is supplied directly to the evaporators and does not go through the condensing unit.
An evaporator heater hold out relay (option) is recommended when two or more evaporators are connected to a single (ACV) condensing unit to allow termination on coils that have already defrosted to prevent unnecessary steaming. This option is not needed on intelliGen™ systems wired for a Master / Slave operation.

Mounted Electric Defrost Kits for BLV condensing units include:
Defrost timer, spring terminal, (1) evaporator fan contactor and:
One (1) defrost heater contactor for 1L and 1H codes
Two (2) defrost heater contactors for 2L and 2H codes
Four (4) defrost heater contactors for 4L and 4H codes
Power is supplied to each intelliGen™ evaporator. volt electrical specification.
Each coil terminates its own defrost. Refrigeration will not start until all coils have terminated defrost.
Contact factory for 575 volt electrical specification

A2L ELECTRICAL DATA

Medium Temperature Models - Bitzer Semi-Hermetic Compressors/208-230V (cont.)

Please consult AWEF table on page 109 to confirm DOE compliance per model

Model	Compressor	Compressor		Condenser		Air Defrost		Remote Loads: Two Contactors							
								Low Amps "2L"				High Amps "2H"			
								Evap. Fan Amps	Defrost Htrs. Amps	Electric Defrost		Evap. Fan Amps	Defrost Htrs. Amps	Electric Defrost	
		RLA	LRA	No. Fans	FLA (Total)	MCA	MOPD			MCA	MOPD			MCA	MOPD
BCV0150MCABV	4PES-15Y	48.7	294.0	2	7.0	67.9	110	25	80	100.0	125	25	96	120.0	125
BCV0200MCABV	4NES-20Y	57.7	352.0	2	7.0	79.1	125	25	80	104.1	150	25	96	120.0	150
BCV0220MCABV	4JE-22Y	61.5	352.0	2	7.0	83.9	125	20	80	103.9	150	20	96	120.0	150
BCV0250MCABV	4HE-25Y	75.6	436.0	2	7.0	101.5	175	—	—	—	—	—	—	—	—
BCV0300MCABV	4GE-30Y	89.7	490.0	3	10.5	122.6	200	—	—	—	—	—	—	—	—
BCV0330MCABV	6JE-33Y	100.0	550.0	3	10.5	135.5	225	—	—	—	—	—	—	—	—
BCV0350MCABV	6HE-35Y	105.1	550.0	3	10.5	141.9	225	—	—	—	—	—	—	—	—
BCV0400MCABV	6GE-40Y	141.0	700.0	4	14.0	190.3	300	—	—	—	—	—	—	—	—
BCV0500MCABV	6FE-50Y	143.6	950.0	4	14.0	193.5	300	—	—	—	—	—	—	—	—

Notes:

MCA = Minimum Circuit Ampacity
MOP = Maximum Overcurrent Protection

intelliGen™ and Air Defrost Units do not carry any of the evaporator fan or heater loads.
Power is supplied directly to the evaporators and does not go through the condensing unit.
An evaporator heater hold out relay (option) is recommended when two or more evaporators are connected to a single (ACV) condensing unit to allow termination on coils that have already defrosted to prevent unnecessary steaming. This option is not needed on intelliGen™ systems wired for a Master / Slave operation.

Mounted Electric Defrost Kits for BLV condensing units include:
Defrost timer, spring terminal, (1) evaporator fan contactor and:
One (1) defrost heater contactor for 1L and 1H codes
Two (2) defrost heater contactors for 2L and 2H codes
Four (4) defrost heater contactors for 4L and 4H codes
Power is supplied to each intelliGen™ evaporator. volt electrical specification.
Each coil terminates its own defrost. Refrigeration will not start until all coils have terminated defrost.
Contact factory for 575 volt electrical specification

A2L ELECTRICAL DATA

Medium Temperature Models - Bitzer Semi-Hermetic Compressors/460V

Please consult AWEF table on page 109 to confirm DOE compliance per model

Model	Compressor	Compressor		Condenser		Air Defrost		Remote Loads: Four Contactors							
								Low Amps "4L"				High Amps "4H"			
								Evap. Fan Amps	Defrost Htrs. Amps	Electric Defrost		Evap. Fan Amps	Defrost Htrs. Amps	Electric Defrost	
		RLA	LRA	No. Fans	FLA (Total)	MCA	MOPD			MCA	MOPD			MCA	MOPD
BCV0150MDABV	4PES-15Y	24.4	147.0	2	3.4	33.9	50	15	48	60.0	70	15	64	80.0	80
BCV0200MDABV	4NES-20Y	28.8	176.0	2	3.4	39.4	60	15	48	60.0	80	15	64	80.0	80
BCV0220MDABV	4JE-22Y	30.8	176.0	2	3.4	41.9	70	15	48	60.0	80	15	64	80.0	80
BCV0250MDABV	4HE-25Y	37.8	218.0	2	3.4	50.7	80	20	64	80.0	100	20	96	120.0	125
BCV0300MDABV	4GE-30Y	44.9	245.0	3	5.1	61.2	100	20	64	81.2	125	20	96	120.0	125
BCV0330MDABV	6JE-33Y	50.0	275.0	3	5.1	67.6	110	20	64	87.6	125	20	96	120.0	125
BCV0350MDABV	6HE-35Y	52.6	275.0	3	5.1	70.8	110	20	64	90.9	125	20	96	120.0	125
BCV0400MDABV	6GE-40Y	70.5	350.0	4	6.8	94.9	150	20	64	114.9	175	20	96	120.0	175
BCV0500MDABV	6FE-50Y	71.8	425.0	4	6.8	96.5	150	20	64	116.6	175	20	96	120.0	175

Model	Compressor	Compressor		Condenser		Air Defrost		Remote Loads: Three Contactors							
								Low Amps "3L"				High Amps "3H"			
								Evap. Fan Amps	Defrost Htrs. Amps	Electric Defrost		Evap. Fan Amps	Defrost Htrs. Amps	Electric Defrost	
		RLA	LRA	No. Fans	FLA (Total)	MCA	MOPD			MCA	MOPD			MCA	MOPD
BCV0150MDABV	4PES-15Y	24.4	147.0	2	3.4	33.9	50	15	48	60.0	70	15	64	80.0	80
BCV0200MDABV	4NES-20Y	28.8	176.0	2	3.4	39.4	60	15	48	60.0	80	15	64	80.0	80
BCV0220MDABV	4JE-22Y	30.8	176.0	2	3.4	41.9	70	15	64	80.0	80	15	64	80.0	80
BCV0250MDABV	4HE-25Y	37.8	218.0	2	3.4	50.7	80	15	64	80.0	100	20	64	80.0	100
BCV0300MDABV	4GE-30Y	44.9	245.0	3	5.1	61.2	100	20	64	81.2	125	20	64	81.2	125
BCV0330MDABV	6JE-33Y	50.0	275.0	3	5.1	67.6	110	20	64	87.6	125	20	64	87.6	125
BCV0350MDABV	6HE-35Y	52.6	275.0	3	5.1	70.8	110	20	64	90.9	125	20	96	120.0	125
BCV0400MDABV	6GE-40Y	70.5	350.0	4	6.8	94.9	150	20	64	114.9	175	22	64	116.9	175
BCV0500MDABV	6FE-50Y	71.8	425.0	4	6.8	96.5	150	20	64	116.6	175	22	64	118.6	175

Notes:

Λ D = 460/3/60
MCA = Minimum Circuit Ampacity
MOP = Maximum Overcurrent Protection
intelliGen™ and Air Defrost Units do not carry any of the evaporator fan or heater loads.
Power is supplied directly to the evaporators and does not go through the condensing unit.
An evaporator heater hold out relay (option) is recommended when two or more evaporators are connected to a single (BCV) condensing unit to allow termination on coils that have already defrosted to prevent unnecessary steaming. This option is not needed on A0400 intelliGen™ systems wired for a Master / Slave operation.

Mounted Electric Defrost Kits for BCV condensing units include:
Defrost timer, terminal strip, (1) evaporator fan contactor and:
One (1) defrost heater contactor for 1L and 1H codes
Two (2) defrost heater contactors for 2L and 2H codes
Four (4) defrost heater contactors for 4L and 4H codes
Power is supplied to each intelliGen™ evaporator. volt electrical specification.
Each coil terminates its own defrost. Refrigeration will not start until all coils have terminated defrost.
Contact factory for 575 volt electrical specification

A2L ELECTRICAL DATA

Medium Temperature Models - Bitzer Semi-Hermetic Compressors/460V (cont.)

Please consult AWEF table on page 109 to confirm DOE compliance per model

Model	Compressor	Compressor		Condenser		Air Defrost		Remote Loads: Two Contactors							
								Low Amps "2L"				High Amps "2H"			
								Evap. Fan Amps	Defrost Htrs. Amps	Electric Defrost		Evap. Fan Amps	Defrost Htrs. Amps	Electric Defrost	
		RLA	LRA	No. Fans	FLA (Total)	MCA	MOPD			MCA	MOPD			MCA	MOPD
BCV0150MDABV	4PES-15Y	24.4	147.0	2	3.4	33.9	50	15	48	60.0	70	15	64	80.0	80
BCV0200MDABV	4NES-20Y	28.8	176.0	2	3.4	39.4	60	15	48	60.0	80	15	64	80.0	80
BCV0220MDABV	4JE-22Y	30.8	176.0	2	3.4	41.9	70	15	48	60.0	80	15	64	80.0	80
BCV0250MDABV	4HE-25Y	37.8	218.0	2	3.4	50.7	80	15	48	65.7	100	15	80	100.0	100
BCV0300MDABV	4GE-30Y	44.9	245.0	3	5.1	61.2	100	15	80	100.0	110	20	96	120.0	125
BCV0330MDABV	6JE-33Y	50.0	275.0	3	5.1	67.6	110	15	80	100.0	125	20	96	120.0	125
BCV0350MDABV	6HE-35Y	52.6	275.0	3	5.1	70.8	110	20	80	100.0	125	20	96	120.0	125
BCV0400MDABV	6GE-40Y	70.5	350.0	4	6.8	94.9	150	20	80	114.9	175	20	96	120.0	175
BCV0500MDABV	6FE-50Y	71.8	425.0	4	6.8	96.5	150	20	80	116.6	175	20	96	120.0	175

Model	Compressor	Compressor		Condenser		Air Defrost		Remote Loads: One Contactor							
								Low Amps "1L"				High Amps "1H"			
								Evap. Fan Amps	Defrost Htrs. Amps	Electric Defrost		Evap. Fan Amps	Defrost Htrs. Amps	Electric Defrost	
		RLA	LRA	No. Fans	FLA (Total)	MCA	MOPD			MCA	MOPD			MCA	MOPD
BCV0150MDABV	4PES-15Y	24.4	147.0	2	3.4	33.9	50	15	40	50.0	70	15	48	60.0	70
BCV0200MDABV	4NES-20Y	28.8	176.0	2	3.4	39.4	60	15	40	54.4	80	15	48	60.0	80
BCV0220MDABV	4JE-22Y	30.8	176.0	2	3.4	41.9	70	15	40	56.9	80	15	48	60.0	80
BCV0250MDABV	4HE-25Y	37.8	218.0	2	3.4	50.7	80	—	—	—	—	—	—	—	—
BCV0300MDABV	4GE-30Y	44.9	245.0	3	5.1	61.2	100	—	—	—	—	—	—	—	—
BCV0330MDABV	6JE-33Y	50.0	275.0	3	5.1	67.6	110	—	—	—	—	—	—	—	—
BCV0350MDABV	6HE-35Y	52.6	275.0	3	5.1	70.8	110	—	—	—	—	—	—	—	—
BCV0400MDABV	6GE-40Y	70.5	350.0	4	6.8	94.9	150	—	—	—	—	—	—	—	—
BCV0500MDABV	6FE-50Y	71.8	425.0	4	6.8	96.5	150	—	—	—	—	—	—	—	—

Notes:
Λ D = 460/3/60
MCA = Minimum Circuit Ampacity
MOP = Maximum Overcurrent Protection
intelliGen™ and Air Defrost Units do not carry any of the evaporator fan or heater loads.
Power is supplied directly to the evaporators and does not go through the condensing unit.
An evaporator heater hold out relay (option) is recommended when two or more evaporators are connected to a single (BCV) condensing unit to allow termination on coils that have already defrosted to prevent unnecessary steaming. This option is not needed on A0400 intelliGen™ systems wired for a Master / Slave operation.

Mounted Electric Defrost Kits for BCV condensing units include:
Defrost timer, terminal strip, (1) evaporator fan contactor and:
One (1) defrost heater contactor for 1L and 1H codes
Two (2) defrost heater contactors for 2L and 2H codes
Four (4) defrost heater contactors for 4L and 4H codes
Power is supplied to each intelliGen™ evaporator. volt electrical specification.
Each coil terminates its own defrost. Refrigeration will not start until all coils have terminated defrost.
Contact factory for 575 volt electrical specification

A2L ELECTRICAL DATA

Low Temperature Models - Bitzer Semi-Hermetic Compressors/208-230V

Please consult AWEF table on page 109 to confirm DOE compliance per model

Model	Compressor	Compressor		Condenser		Air Defrost		Remote Loads: Four Contactors							
								Low Amps "4L"				High Amps "4H"			
								Evap. Fan Amps	Defrost Htrs. Amps	Electric Defrost		Evap. Fan Amps	Defrost Htrs. Amps	Electric Defrost	
		RLA	LRA	No. Fans	FLA (Total)	MCA	MOPD			MCA	MOPD			MCA	MOPD
BCV0130LCABV	4JE-15Y	50.0	352	2	7	69.5	110	22	48	91.5	125	22	64	91.5	125
BCV0150LCABV	4HE-18Y	54.1	352	2	7	74.6	125	25	64	99.6	150	25	91	113.8	150
BCV0200LCABV	4GE-23Y	57.7	352	2	13.2	85.3	125	25	96	120.0	150	25	105	131.3	150
BCV0220LCABV	6JE-25Y	71.0	490	2	7	95.8	150	25	96	120.8	175	25	105	131.3	175
BCV0250LCABV	6HE-28Y	77.6	490	2	13.2	110.2	175	25	96	135.2	200	25	108	135.2	200
BCV0300LCABV	6GE-34Y	84.6	490	2	7	112.8	175	30	150	187.5	225	30	181	226.3	250
BCV0400LCABV	6FE-44Y	97.4	700	3	10.5	132.3	225	30	150	187.5	250	30	181	226.3	250

Model	Compressor	Compressor		Condenser		Air Defrost		Remote Loads: Three Contactors							
								Low Amps "3L"				High Amps "3H"			
								Evap. Fan Amps	Defrost Htrs. Amps	Electric Defrost		Evap. Fan Amps	Defrost Htrs. Amps	Electric Defrost	
		RLA	LRA	No. Fans	FLA (Total)	MCA	MOPD			MCA	MOPD			MCA	MOPD
BCV0130LCABV	4JE-15Y	50.0	352	2	7	69.5	110	20	40	89.5	125	22	48	91.5	125
BCV0150LCABV	4HE-18Y	54.1	352	2	7	74.6	125	22	70	96.6	150	25	64	99.6	150
BCV0200LCABV	4GE-23Y	57.7	352	2	13.2	85.3	125	20	85	106.3	150	25	96	120.0	150
BCV0220LCABV	6JE-25Y	71.0	490	2	7	95.8	150	20	85	115.8	175	25	96	120.8	175
BCV0250LCABV	6HE-28Y	77.6	490	2	13.2	110.2	175	20	80	130.2	200	25	96	135.2	200
BCV0300LCABV	6GE-34Y	84.6	490	2	7	112.8	175	20	96	132.8	200	25	96	137.8	200
BCV0400LCABV	6FE-44Y	97.4	700	3	10.5	132.3	225	20	96	152.3	225	25	96	157.3	250

Notes:

Λ C=208-230/3/60
MCA = Minimum Circuit Ampacity
MOP = Maximum Overcurrent Protection
intelliGen™and Air Defrost Units do not carry any of the evaporator fan or heater loads.
Power is supplied directly to the evaporators and does not go through the condensing unit.
An evaporator heater hold out relay (option) is recommended when two or more evaporators are connected to a single (BCV) condensing unit to allow termination on coils that have already defrosted to prevent unnecessary steaming. This option is not needed on A0400 intelliGen™ systems wired for a Master / Slave operation.

Mounted Electric Defrost Kits for BCV condensing units include:
Defrost timer, terminal strip, (1) evaporator fan contactor and:
One (1) defrost heater contactor for 1L and 1H codes
Two (2) defrost heater contactors for 2L and 2H codes
Four (4) defrost heater contactors for 4L and 4H codes
Power is supplied to each intelliGen™ evaporator. volt electrical specification.
Each coil terminates its own defrost. Refrigeration will not start until all coils have terminated defrost.
Contact factory for 575 volt electrical specification

A2L ELECTRICAL DATA

Low Temperature Models - Bitzer Semi-Hermetic Compressors/208-230V (cont.)

Please consult AWEF table on page 109 to confirm DOE compliance per model

Model	Compressor	Compressor		Condenser		Air Defrost		Remote Loads: Two Contactors							
								Low Amps "2L"				High Amps "2H"			
		RLA	LRA	No. Fans	FLA (Total)	MCA	MOPD	Evap. Fan Amps	Defrost Htrs. Amps	Electric Defrost MCA	Electric Defrost MOPD	Evap. Fan Amps	Defrost Htrs. Amps	Electric Defrost MCA	Electric Defrost MOPD
BCV0130LCABV	4JE-15Y	50.0	352	2	7	69.5	110	15	34	84.5	125	20	74	92.5	125
BCV0150LCABV	4HE-18Y	54.1	352	2	7	74.6	125	20	80	100.0	125	20	91	113.8	125
BCV0200LCABV	4GE-23Y	57.7	352	2	13.2	85.3	125	20	80	105.3	150	20	96	120.0	150
BCV0220LCABV	6JE-25Y	71.0	490	2	7	95.8	150	20	80	115.8	175	20	96	120.0	175
BCV0250LCABV	6HE-28Y	77.6	490	2	13.2	110.2	175	20	80	130.2	200	20	96	130.2	200
BCV0300LCABV	6GE-34Y	84.6	490	2	7	112.8	175	20	80	132.8	200	20	96	132.8	200
BCV0400LCABV	6FE-44Y	97.4	700	3	10.5	132.3	225	20	80	152.3	225	20	96	152.3	225

Model	Compressor	Compressor		Condenser		Air Defrost		Remote Loads: One Contactor							
								Low Amps "1L"				High Amps "1H"			
		RLA	LRA	No. Fans	FLA (Total)	MCA	MOPD	Evap. Fan Amps	Defrost Htrs. Amps	Electric Defrost MCA	Electric Defrost MOPD	Evap. Fan Amps	Defrost Htrs. Amps	Electric Defrost MCA	Electric Defrost MOPD
BCV0130LCABV	4JE-15Y	50.0	352	2	7	69.5	110	15	40	84.5	125	15	48	84.5	125
BCV0150LCABV	4HE-18Y	54.1	352	2	7	74.6	125	15	40	89.6	125	15	48	89.6	125
BCV0200LCABV	4GE-23Y	57.7	352	2	13.2	85.3	125	15	40	100.3	150	15	48	100.3	150
BCV0220LCABV	6JE-25Y	71.0	490	2	7	95.8	150	15	40	110.8	175	15	48	110.8	175
BCV0250LCABV	6HE-28Y	77.6	490	2	13.2	110.2	175	—	—	—	—	—	—	—	—
BCV0300LCABV	6GE-34Y	84.6	490	2	7	112.8	175	—	—	—	—	—	—	—	—
BCV0400LCABV	6FE-44Y	97.4	700	3	10.5	132.3	225	—	—	—	—	—	—	—	—

Notes:

Λ C=208-230/3/60
MCA = Minimum Circuit Ampacity
MOP = Maximum Overcurrent Protection
intelliGen™ and Air Defrost Units do not carry any of the evaporator fan or heater loads.
Power is supplied directly to the evaporators and does not go through the condensing unit.
An evaporator heater hold out relay (option) is recommended when two or more evaporators are connected to a single (BCV) condensing unit to allow termination on coils that have already defrosted to prevent unnecessary steaming. This option is not needed on A0400 intelliGen™ systems wired for a Master / Slave operation.

Mounted Electric Defrost Kits for BCV condensing units include:
Defrost timer, terminal strip, (1) evaporator fan contactor and:
One (1) defrost heater contactor for 1L and 1H codes
Two (2) defrost heater contactors for 2L and 2H codes
Four (4) defrost heater contactors for 4L and 4H codes
Power is supplied to each intelliGen™ evaporator. volt electrical specification.
Each coil terminates its own defrost. Refrigeration will not start until all coils have terminated defrost.
Contact factory for 575 volt electrical specification

A2L ELECTRICAL DATA

Low Temperature Models - Bitzer/460V

Please consult AWEF table on page 109 to confirm DOE compliance per model

Model	Compressor	Compressor		Condenser		Air Defrost		Remote Loads: Four Contactors							
								Low Amps "4L"				High Amps "4H"			
								Evap. Fan Amps	Defrost Htrs. Amps	Electric Defrost		Evap. Fan Amps	Defrost Htrs. Amps	Electric Defrost	
		RLA	LRA	No. Fans	FLA (Total)	MCA	MOPD			MCA	MOPD			MCA	MOPD
BCV0130LDABV	4JE-15Y	25.0	176	2	3.4	34.6	50	—	—	—	—	—	—	—	—
BCV0150LDABV	4HE-18Y	27.1	176	2	3.4	37.3	60	15	48	60.0	70	15	48	60.0	70
BCV0200LDABV	4GE-23Y	28.8	176	2	6.6	42.6	70	15	48	60.0	80	15	48	60.0	80
BCV0220LDABV	6JE-25Y	35.5	245	2	3.4	47.8	80	15	48	62.8	90	15	48	62.8	90
BCV0250LDABV	6HE-28Y	38.8	245	2	6.6	55.1	90	15	48	70.1	100	15	64	80.0	100
BCV0300LDABV	6GE-34Y	42.3	245	2	3.4	56.3	90	20	64	80.0	110	20	91	113.8	125
BCV0400LDABV	6FE-44Y	48.7	350	3	5.1	66.0	110	20	64	86.0	125	20	91	113.8	125

Model	Compressor	Compressor		Condenser		Air Defrost		Remote Loads: Three Contactors							
								Low Amps "3L"				High Amps "3H"			
								Evap. Fan Amps	Defrost Htrs. Amps	Electric Defrost		Evap. Fan Amps	Defrost Htrs. Amps	Electric Defrost	
		RLA	LRA	No. Fans	FLA (Total)	MCA	MOPD			MCA	MOPD			MCA	MOPD
BCV0130LDABV	4JE-15Y	25.0	176	2	3.4	34.6	50	15	22	49.7	70	20	22	54.7	70
BCV0150LDABV	4HE-18Y	27.1	176	2	3.4	37.3	60	15	32	52.3	70	15	48	60.0	70
BCV0200LDABV	4GE-23Y	28.8	176	2	6.6	42.6	70	15	48	60.0	80	15	48	60.0	80
BCV0220LDABV	6JE-25Y	35.5	245	2	3.4	47.8	80	15	48	62.8	90	15	48	62.8	90
BCV0250LDABV	6HE-28Y	38.8	245	2	6.6	55.1	90	15	48	70.1	100	15	64	80.0	100
BCV0300LDABV	6GE-34Y	42.3	245	2	3.4	56.3	90	15	64	80.0	110	22	64	80.0	110
BCV0400LDABV	6FE-44Y	48.7	350	3	5.1	66.0	110	15	64	81.0	125	22	64	88.0	125

Notes:
MCA = Minimum Circuit Ampacity
MOP = Maximum Overcurrent Protection

intelliGen™ and Air Defrost Units do not carry any of the evaporator fan or heater loads.
Power is supplied directly to the evaporators and does not go through the condensing unit.
An evaporator heater hold out relay (option) is recommended when two or more evaporators are connected to a single (ACV) condensing unit to allow termination on coils that have already defrosted to prevent unnecessary steaming. This option is not needed on intelliGen™ systems wired for a Master / Slave operation.

Mounted Electric Defrost Kits for BLV condensing units include:
Defrost timer, spring terminal, (1) evaporator fan contactor and:
One (1) defrost heater contactor for 1L and 1H codes
Two (2) defrost heater contactors for 2L and 2H codes
Four (4) defrost heater contactors for 4L and 4H codes
Power is supplied to each intelliGen™ evaporator. volt electrical specification.
Each coil terminates its own defrost. Refrigeration will not start until all coils have terminated defrost.
Contact factory for 575 volt electrical specification

A2L ELECTRICAL DATA

Low Temperature Models - Bitzer/460V (cont.)

Please consult AWEF table on page 109 to confirm DOE compliance per model

Model	Compressor	Compressor		Condenser		Air Defrost		Remote Loads: Two Contactors							
								Low Amps "2L"				High Amps "2H"			
		RLA	LRA	No. Fans	FLA (Total)	MCA	MOPD	Evap. Fan Amps	Defrost Htrs. Amps	Electric Defrost MCA	Electric Defrost MOPD	Evap. Fan Amps	Defrost Htrs. Amps	Electric Defrost MCA	Electric Defrost MOPD
BCV0130LDABV	4JE-15Y	25.0	176	2	3.4	34.6	50	10	19	44.7	60	15	38	49.7	70
BCV0150LDABV	4HE-18Y	27.1	176	2	3.4	37.3	60	15	32	52.3	70	15	48	60.0	70
BCV0200LDABV	4GE-23Y	28.8	176	2	6.6	42.6	70	15	48	60.0	80	15	64	80.0	80
BCV0220LDABV	6JE-25Y	35.5	245	2	3.4	47.8	80	15	48	62.8	90	15	64	80.0	90
BCV0250LDABV	6HE-28Y	38.8	245	2	6.6	55.1	90	15	48	70.1	100	15	64	80.0	100
BCV0300LDABV	6GE-34Y	42.3	245	2	3.4	56.3	90	15	48	71.3	110	15	80	100.0	110
BCV0400LDABV	6FE-44Y	48.7	350	3	5.1	66.0	110	15	48	81.0	125	15	80	100.0	125

Model	Compressor	Compressor		Condenser		Air Defrost		Remote Loads: One Contactor							
								Low Amps "1L"				High Amps "1H"			
		RLA	LRA	No. Fans	FLA (Total)	MCA	MOPD	Evap. Fan Amps	Defrost Htrs. Amps	Electric Defrost MCA	Electric Defrost MOPD	Evap. Fan Amps	Defrost Htrs. Amps	Electric Defrost MCA	Electric Defrost MOPD
BCV0130LDABV	4JE-15Y	25.0	176	2	3.4	34.6	50	10	19	44.7	60	10	24	44.7	60
BCV0150LDABV	4HE-18Y	27.1	176	2	3.4	37.3	60	15	24	52.3	70	15	40	52.3	70
BCV0200LDABV	4GE-23Y	28.8	176	2	6.6	42.6	70	15	40	57.6	80	15	48	60.0	80
BCV0220LDABV	6JE-25Y	35.5	245	2	3.4	47.8	80	15	40	62.8	90	15	48	62.8	90
BCV0250LDABV	6HE-28Y	38.8	245	2	6.6	55.1	90	15	40	70.1	100	15	48	70.1	100
BCV0300LDABV	6GE-34Y	42.3	245	2	3.4	56.3	90	15	40	71.3	110	15	48	71.3	110
BCV0400LDABV	6FE-44Y	48.7	350	3	5.1	66.0	110	15	40	81.0	125	15	48	81.0	125

Notes:
MCA = Minimum Circuit Ampacity
MOP = Maximum Overcurrent Protection

intelliGen™ and Air Defrost Units do not carry any of the evaporator fan or heater loads.
Power is supplied directly to the evaporators and does not go through the condensing unit.
An evaporator heater hold out relay (option) is recommended when two or more evaporators are connected to a single (ACV) condensing unit to allow termination on coils that have already defrosted to prevent unnecessary steaming. This option is not needed on intelliGen™ systems wired for a Master / Slave operation.

Mounted Electric Defrost Kits for BLV condensing units include:
Defrost timer, spring terminal, (1) evaporator fan contactor and:
One (1) defrost heater contactor for 1L and 1H codes
Two (2) defrost heater contactors for 2L and 2H codes
Four (4) defrost heater contactors for 4L and 4H codes
Power is supplied to each intelliGen™ evaporator. volt electrical specification.
Each coil terminates its own defrost. Refrigeration will not start until all coils have terminated defrost.
Contact factory for 575 volt electrical specification

A1 ELECTRICAL DATA

Medium Temperature Models - Bitzer/208-230V

Please consult AWEF table on page 109 to confirm DOE compliance per model

Model	Compressor	Compressor		Condenser		Air Defrost		Remote Loads: Four Contactors							
								Low Amps "4L"				High Amps "4H"			
								Evap. Fan Amps	Defrost Htrs. Amps	Electric Defrost		Evap. Fan Amps	Defrost Htrs. Amps	Electric Defrost	
		RLA	LRA	No. Fans	FLA (Total)	MCA	MOPD			MCA	MOPD			MCA	MOPD
BCV0150M\ABX	4PES-15Y	48.7	294.0	2	7	67.9	110	25	96	120.0	125	25	108	135.0	150
BCV0200M\ABX	4NES-20Y	57.7	352.0	2	7	79.1	125	25	96	120.0	150	25	108	135.0	150
BCV0220M\ABX	4JE-22Y	61.5	352.0	2	7	83.9	125	25	96	120.0	150	25	108	135.0	150
BCV0250M\ABX	4HE-25Y	75.6	436.0	2	7	101.6	175	25	125	156.3	200	30	181	226.3	250
BCV0300M\ABX	4GE-30Y	89.7	490.0	3	10.5	122.7	200	30	149	186.3	225	30	181	226.3	250
BCV0330M\ABX	6JE-33Y	100.0	550.0	3	10.5	135.5	225	30	149	186.3	250	30	181	226.3	250
BCV0350M\ABX	6HE-35Y	105.1	550.0	3	10.5	141.9	225	35	160	200.0	250	35	192	240.0	250
BCV0400M\ABX	6GE-40Y	141.0	700.0	4	14	190.3	300	35	160	225.3	350	35	192	240.0	350
BCV0500M\ABX	6FE-50Y	143.6	950.0	4	14	193.5	300	35	160	228.5	350	35	192	240.0	350

Model	Compressor	Compressor		Condenser		Air Defrost		Remote Loads: Three Contactors							
								Low Amps "3L"				High Amps "3H"			
								Evap. Fan Amps	Defrost Htrs. Amps	Electric Defrost		Evap. Fan Amps	Defrost Htrs. Amps	Electric Defrost	
		RLA	LRA	No. Fans	FLA (Total)	MCA	MOPD			MCA	MOPD			MCA	MOPD
BCV0150M\ABX	4PES-15Y	48.7	294.0	2	7	67.9	110	25	96	120.0	125	25	96	120.0	125
BCV0200M\ABX	4NES-20Y	57.7	352.0	2	7	79.1	125	25	96	120.0	150	25	96	120.0	150
BCV0220M\ABX	4JE-22Y	61.5	352.0	2	7	83.9	125	22	96	120.0	150	25	96	120.0	150
BCV0250M\ABX	4HE-25Y	75.6	436.0	2	7	101.6	175	20	96	121.6	175	25	120	150.0	200
BCV0300M\ABX	4GE-30Y	89.7	490.0	3	10.5	122.7	200	25	125	156.3	225	20	125	156.3	225
BCV0330M\ABX	6JE-33Y	100.0	550.0	3	10.5	135.5	225	25	125	160.5	250	20	125	156.3	250
BCV0350M\ABX	6HE-35Y	105.1	550.0	3	10.5	141.9	225	30	130	171.9	250	35	144	180.0	250
BCV0400M\ABX	6GE-40Y	141.0	700.0	4	14	190.3	300	30	130	220.3	350	30	144	220.3	350
BCV0500M\ABX	6FE-50Y	143.6	950.0	4	14	193.5	300	30	130	223.5	350	30	144	223.5	350

Notes:

\ C=208-230/3/60
MCA = Minimum Circuit Ampacity
MOP = Maximum Overcurrent Protection
intelliGen™ and Air Defrost Units do not carry any of the evaporator fan or heater loads.
Power is supplied directly to the evaporators and does not go through the condensing unit.
An evaporator heater hold out relay (option) is recommended when two or more evaporators are connected to a single (BCV) condensing unit to allow termination on coils that have already defrosted to prevent unnecessary steaming. This option is not needed on A0400 intelliGen™ systems wired for a Master / Slave operation.

Mounted Electric Defrost Kits for BCV condensing units include:
Defrost timer, terminal strip, (1) evaporator fan contactor and:
One (1) defrost heater contactor for 1L and 1H codes
Two (2) defrost heater contactors for 2L and 2H codes
Four (4) defrost heater contactors for 4L and 4H codes
Power is supplied to each intelliGen™ evaporator. volt electrical specification.
Each coil terminates its own defrost. Refrigeration will not start until all coils have terminated defrost.
Contact factory for 575 volt electrical specification

A1 ELECTRICAL DATA

Medium Temperature Models - Bitzer/208-230V (cont.)

Please consult AWEF table on page 109 to confirm DOE compliance per model

Model	Compressor	Compressor		Condenser		Air Defrost		Remote Loads: Two Contactors							
								Low Amps "2L"				High Amps "2H"			
		RLA	LRA	No. Fans	FLA (Total)	MCA	MOPD	Evap. Fan Amps	Defrost Htrs. Amps	Electric Defrost MCA	Electric Defrost MOPD	Evap. Fan Amps	Defrost Htrs. Amps	Electric Defrost MCA	Electric Defrost MOPD
BCV0150M∧ABX	4PES-15Y	48.7	294.0	2	7	67.9	110	25	80	100.0	125	25	96	120.0	125
BCV0200M∧ABX	4NES-20Y	57.7	352.0	2	7	79.1	125	25	80	104.1	150	25	96	120.0	150
BCV0220M∧ABX	4JE-22Y	61.5	352.0	2	7	83.9	125	20	80	103.9	150	20	96	120.0	150
BCV0250M∧ABX	4HE-25Y	75.6	436.0	2	7	101.6	175	-	-	-	-	-	-	-	-
BCV0300M∧ABX	4GE-30Y	89.7	490.0	3	10.5	122.7	200	-	-	-	-	-	-	-	-
BCV0330M∧ABX	6JE-33Y	100.0	550.0	3	10.5	135.5	225	-	-	-	-	-	-	-	-
BCV0350M∧ABX	6HE-35Y	105.1	550.0	3	10.5	141.9	225	-	-	-	-	-	-	-	-
BCV0400M∧ABX	6GE-40Y	141.0	700.0	4	14	190.3	300	-	-	-	-	-	-	-	-
BCV0500M∧ABX	6FE-50Y	143.6	950.0	4	14	193.5	300	-	-	-	-	-	-	-	-

Notes:
∧ C=208-230/3/60
MCA = Minimum Circuit Ampacity
MOP = Maximum Overcurrent Protection
intelliGen™ and Air Defrost Units do not carry any of the evaporator fan or heater loads.
Power is supplied directly to the evaporators and does not go through the condensing unit.
An evaporator heater hold out relay (option) is recommended when two or more evaporators are connected to a single (BCV) condensing unit to allow termination on coils that have already defrosted to prevent unnecessary steaming. This option is not needed on A0400 intelliGen™ systems wired for a Master / Slave operation.

Mounted Electric Defrost Kits for BCV condensing units include:
Defrost timer, terminal strip, (1) evaporator fan contactor and:
One (1) defrost heater contactor for 1L and 1H codes
Two (2) defrost heater contactors for 2L and 2H codes
Four (4) defrost heater contactors for 4L and 4H codes
Power is supplied to each intelliGen™ evaporator. volt electrical specification.
Each coil terminates its own defrost. Refrigeration will not start until all coils have terminated defrost.
Contact factory for 575 volt electrical specification

A1 ELECTRICAL DATA

Medium Temperature Models - Bitzer/460V

Please consult AWEF table on page 109 to confirm DOE compliance per model

Model	Compressor	Compressor		Condenser		Air Defrost		Remote Loads: Four Contactors							
								Low Amps "4L"				High Amps "4H"			
								Evap. Fan Amps	Defrost Htrs. Amps	Electric Defrost		Evap. Fan Amps	Defrost Htrs. Amps	Electric Defrost	
		RLA	LRA	No. Fans	FLA (Total)	MCA	MOPD			MCA	MOPD			MCA	MOPD
BCV0150M∧ABX	4PES-15Y	24.4	147.0	2	3.4	33.8	50	15	48	60.0	70	15	64	80.0	80
BCV0200M∧ABX	4NES-20Y	28.8	176.0	2	3.4	39.5	60	15	48	60.0	80	15	64	80.0	80
BCV0220M∧ABX	4JE-22Y	30.8	176.0	2	3.4	41.9	70	15	48	60.0	80	15	64	80.0	80
BCV0250M∧ABX	4HE-25Y	37.8	218.0	2	3.4	50.7	80	20	64	80.0	100	20	96	120.0	125
BCV0300M∧ABX	4GE-30Y	44.9	245.0	3	5.1	61.2	100	20	64	81.2	125	20	96	120.0	125
BCV0330M∧ABX	6JE-33Y	50.0	275.0	3	5.1	67.6	110	20	64	87.6	125	20	96	120.0	125
BCV0350M∧ABX	6HE-35Y	52.6	275.0	3	5.1	70.8	110	20	64	90.8	125	20	96	120.0	125
BCV0400M∧ABX	6GE-40Y	70.5	350.0	4	6.8	94.9	150	20	64	114.9	175	20	96	120.0	175
BCV0500M∧ABX	6FE-50Y	71.8	425.0	4	6.8	96.5	150	20	64	116.5	175	20	96	120.0	175

Model	Compressor	Compressor		Condenser		Air Defrost		Remote Loads: Three Contactors							
								Low Amps "3L"				High Amps "3H"			
								Evap. Fan Amps	Defrost Htrs. Amps	Electric Defrost		Evap. Fan Amps	Defrost Htrs. Amps	Electric Defrost	
		RLA	LRA	No. Fans	FLA (Total)	MCA	MOPD			MCA	MOPD			MCA	MOPD
BCV0150M∧ABX	4PES-15Y	24.4	147.0	2	3.4	33.8	50	15	48	60.0	70	15	64	80.0	80
BCV0200M∧ABX	4NES-20Y	28.8	176.0	2	3.4	39.5	60	15	48	60.0	80	15	64	80.0	80
BCV0220M∧ABX	4JE-22Y	30.8	176.0	2	3.4	41.9	70	15	64	80.0	80	15	64	80.0	80
BCV0250M∧ABX	4HE-25Y	37.8	218.0	2	3.4	50.7	80	15	64	80.0	100	20	64	80.0	100
BCV0300M∧ABX	4GE-30Y	44.9	245.0	3	5.1	61.2	100	20	64	81.2	125	20	64	81.2	125
BCV0330M∧ABX	6JE-33Y	50.0	275.0	3	5.1	67.6	110	20	64	87.6	125	20	64	87.6	125
BCV0350M∧ABX	6HE-35Y	52.6	275.0	3	5.1	70.8	110	20	64	90.8	125	20	96	120.0	125
BCV0400M∧ABX	6GE-40Y	70.5	350.0	4	6.8	94.9	150	20	64	114.9	175	22	64	116.9	175
BCV0500M∧ABX	6FE-50Y	71.8	425.0	4	6.8	96.5	150	20	64	116.5	175	22	64	118.5	175

Notes:

∧ D = 460/3/60
MCA = Minimum Circuit Ampacity
MOP = Maximum Overcurrent Protection
intelliGen™ and Air Defrost Units do not carry any of the evaporator fan or heater loads.
Power is supplied directly to the evaporators and does not go through the condensing unit.
An evaporator heater hold out relay (option) is recommended when two or more evaporators are connected to a single (BCV) condensing unit to allow termination on coils that have already defrosted to prevent unnecessary steaming. This option is not needed on A0400 intelliGen™ systems wired for a Master / Slave operation.

Mounted Electric Defrost Kits for BCV condensing units include:
Defrost timer, terminal strip, (1) evaporator fan contactor and:
One (1) defrost heater contactor for 1L and 1H codes
Two (2) defrost heater contactors for 2L and 2H codes
Four (4) defrost heater contactors for 4L and 4H codes
Power is supplied to each intelliGen™ evaporator. volt electrical specification.
Each coil terminates its own defrost. Refrigeration will not start until all coils have terminated defrost.
Contact factory for 575 volt electrical specification

A1 ELECTRICAL DATA

Medium Temperature Models - Bitzer/460V (cont.)

Please consult AWEF table on page 109 to confirm DOE compliance per model

Model	Compressor	Compressor		Condenser		Air Defrost		Remote Loads: Two Contactors							
								Low Amps "2L"				High Amps "2H"			
		RLA	LRA	No. Fans	FLA (Total)	MCA	MOPD	Evap. Fan Amps	Defrost Htrs. Amps	Electric Defrost MCA	Electric Defrost MOPD	Evap. Fan Amps	Defrost Htrs. Amps	Electric Defrost MCA	Electric Defrost MOPD
BCV0150M∧ABX	4PES-15Y	24.4	147.0	2	3.4	33.8	50	15	48	60.0	70	15	64	80.0	80
BCV0200M∧ABX	4NES-20Y	28.8	176.0	2	3.4	39.5	60	15	48	60.0	80	15	64	80.0	80
BCV0220M∧ABX	4JE-22Y	30.8	176.0	2	3.4	41.9	70	15	48	60.0	80	15	64	80.0	80
BCV0250M∧ABX	4HE-25Y	37.8	218.0	2	3.4	50.7	80	15	48	65.7	100	15	80	100.0	100
BCV0300M∧ABX	4GE-30Y	44.9	245.0	3	5.1	61.2	100	15	80	100.0	110	20	96	120.0	125
BCV0330M∧ABX	6JE-33Y	50.0	275.0	3	5.1	67.6	110	15	80	100.0	125	20	96	120.0	125
BCV0350M∧ABX	6HE-35Y	52.6	275.0	3	5.1	70.8	110	20	80	100.0	125	20	96	120.0	125
BCV0400M∧ABX	6GE-40Y	70.5	350.0	4	6.8	94.9	150	20	80	114.9	175	20	96	120.0	175
BCV0500M∧ABX	6FE-50Y	71.8	425.0	4	6.8	96.5	150	20	80	116.5	175	20	96	120.0	175

Model	Compressor	Compressor		Condenser		Air Defrost		Remote Loads: One Contactor							
								Low Amps "1L"				High Amps "1H"			
		RLA	LRA	No. Fans	FLA (Total)	MCA	MOPD	Evap. Fan Amps	Defrost Htrs. Amps	Electric Defrost MCA	Electric Defrost MOPD	Evap. Fan Amps	Defrost Htrs. Amps	Electric Defrost MCA	Electric Defrost MOPD
BCV0150M∧ABX	4PES-15Y	24.4	147.0	2	3.4	33.8	50	15	40	50.0	70	15	48	60.0	70
BCV0200M∧ABX	4NES-20Y	28.8	176.0	2	3.4	39.5	60	15	40	54.5	80	15	48	60.0	80
BCV0220M∧ABX	4JE-22Y	30.8	176.0	2	3.4	41.9	70	15	40	56.9	80	15	48	60.0	80
BCV0250M∧ABX	4HE-25Y	37.8	218.0	2	3.4	50.7	80	-	-	-	-	-	-	-	-
BCV0300M∧ABX	4GE-30Y	44.9	245.0	3	5.1	61.2	100	-	-	-	-	-	-	-	-
BCV0330M∧ABX	6JE-33Y	50.0	275.0	3	5.1	67.6	110	-	-	-	-	-	-	-	-
BCV0350M∧ABX	6HE-35Y	52.6	275.0	3	5.1	70.8	110	-	-	-	-	-	-	-	-
BCV0400M∧ABX	6GE-40Y	70.5	350.0	4	6.8	94.9	150	-	-	-	-	-	-	-	-
BCV0500M∧ABX	6FE-50Y	71.8	425.0	4	6.8	96.5	150	-	-	-	-	-	-	-	-

Notes:
∧ D = 460/3/60
MCA = Minimum Circuit Ampacity
MOP = Maximum Overcurrent Protection
intelliGen™ and Air Defrost Units do not carry any of the evaporator fan or heater loads.
Power is supplied directly to the evaporators and does not go through the condensing unit.
An evaporator heater hold out relay (option) is recommended when two or more evaporators are connected to a single (BCV) condensing unit to allow termination on coils that have already defrosted to prevent unnecessary steaming. This option is not needed on A0400 intelliGen™ systems wired for a Master / Slave operation.

Mounted Electric Defrost Kits for BCV condensing units include:
Defrost timer, terminal strip, (1) evaporator fan contactor and:
One (1) defrost heater contactor for 1L and 1H codes
Two (2) defrost heater contactors for 2L and 2H codes
Four (4) defrost heater contactors for 4L and 4H codes
Power is supplied to each intelliGen™ evaporator. volt electrical specification.
Each coil terminates its own defrost. Refrigeration will not start until all coils have terminated defrost.
Contact factory for 575 volt electrical specification

A1 ELECTRICAL DATA

Low Temperature Models - Bitzer/208-230V

Please consult AWEF table on page 109 to confirm DOE compliance per model

Model	Compressor	Compressor		Condenser		Air Defrost		Remote Loads: Four Contactors							
								Low Amps "4L"				High Amps "4H"			
		RLA	LRA	No. Fans	FLA (Total)	MCA	MOPD	Evap. Fan Amps	Defrost Htrs. Amps	Electric Defrost MCA	Electric Defrost MOPD	Evap. Fan Amps	Defrost Htrs. Amps	Electric Defrost MCA	Electric Defrost MOPD
BCV0130L/ABX	4JE-15Y	50.0	352.0	2	7	69.5	110	22	48	91.5	125	22	64	91.5	125
BCV0150L/ABX	4HE-18Y	54.1	352.0	2	7	74.6	125	25	64	99.6	150	25	91	113.8	150
BCV0200L/ABX	4GE-23Y	57.7	352.0	2	7	79.1	125	25	96	120.0	150	25	105	131.3	150
BCV0220L/ABX	6JE-25Y	71.0	490.0	2	7	95.8	150	25	96	120.8	175	25	105	131.3	175
BCV0250L/ABX	6HE-28Y	77.6	490.0	2	7	104.0	175	25	96	129.0	200	25	108	135.0	200
BCV0300L/ABX	6GE-34Y	84.6	490.0	2	7	112.8	175	30	150	187.5	225	30	181	226.3	250
BCV0400L/ABX	6FE-44Y	97.4	700.0	3	10.5	132.3	225	30	150	187.5	250	30	181	226.3	250

Model	Compressor	Compressor		Condenser		Air Defrost		Remote Loads: Three Contactors							
								Low Amps "3L"				High Amps "3H"			
		RLA	LRA	No. Fans	FLA (Total)	MCA	MOPD	Evap. Fan Amps	Defrost Htrs. Amps	Electric Defrost MCA	Electric Defrost MOPD	Evap. Fan Amps	Defrost Htrs. Amps	Electric Defrost MCA	Electric Defrost MOPD
BCV0130L/ABX	4JE-15Y	50.0	352.0	2	7	69.5	110	20	40	89.5	125	22	48	91.5	125
BCV0150L/ABX	4HE-18Y	54.1	352.0	2	7	74.6	125	22	70	96.6	150	25	64	99.6	150
BCV0200L/ABX	4GE-23Y	57.7	352.0	2	7	79.1	125	20	85	106.3	150	25	96	120.0	150
BCV0220L/ABX	6JE-25Y	71.0	490.0	2	7	95.8	150	20	85	115.8	175	25	96	120.8	175
BCV0250L/ABX	6HE-28Y	77.6	490.0	2	7	104.0	175	20	80	124.0	200	25	96	129.0	200
BCV0300L/ABX	6GE-34Y	84.6	490.0	2	7	112.8	175	20	96	132.8	200	25	96	137.8	200
BCV0400L/ABX	6FE-44Y	97.4	700.0	3	10.5	132.3	225	20	96	152.3	225	25	96	157.3	250

Notes:

Λ C=208-230/3/60
MCA = Minimum Circuit Ampacity
MOP = Maximum Overcurrent Protection
intelliGen™ and Air Defrost Units do not carry any of the evaporator fan or heater loads.
Power is supplied directly to the evaporators and does not go through the condensing unit.
An evaporator heater hold out relay (option) is recommended when two or more evaporators are connected to a single (BCV) condensing unit to allow termination on coils that have already defrosted to prevent unnecessary steaming. This option is not needed on A0400 intelliGen™ systems wired for a Master / Slave operation.

Mounted Electric Defrost Kits for BCV condensing units include:
Defrost timer, terminal strip, (1) evaporator fan contactor and:
One (1) defrost heater contactor for 1L and 1H codes
Two (2) defrost heater contactors for 2L and 2H codes
Four (4) defrost heater contactors for 4L and 4H codes
Power is supplied to each intelliGen™ evaporator. volt electrical specification.
Each coil terminates its own defrost. Refrigeration will not start until all coils have terminated defrost.
Contact factory for 575 volt electrical specification

A1 ELECTRICAL DATA

Low Temperature Models - Bitzer/208-230V

Please consult AWEF table on page 109 to confirm DOE compliance per model

Model	Compressor	Compressor		Condenser		Air Defrost		Remote Loads: Two Contactors							
								Low Amps "2L"				High Amps "2H"			
		RLA	LRA	No. Fans	FLA (Total)	MCA	MOPD	Evap. Fan Amps	Defrost Htrs. Amps	Electric Defrost MCA	Electric Defrost MOPD	Evap. Fan Amps	Defrost Htrs. Amps	Electric Defrost MCA	Electric Defrost MOPD
BCV0130L/ABX	4JE-15Y	50.0	352.0	2	7	69.5	110	15	34	84.5	125	20	74	92.5	125
BCV0150L/ABX	4HE-18Y	54.1	352.0	2	7	74.6	125	20	80	100.0	125	20	91	113.8	125
BCV0200L/ABX	4GE-23Y	57.7	352.0	2	7	79.1	125	20	80	100.0	150	20	96	120.0	150
BCV0220L/ABX	6JE-25Y	71.0	490.0	2	7	95.8	150	20	80	115.8	175	20	96	120.0	175
BCV0250L/ABX	6HE-28Y	77.6	490.0	2	7	104.0	175	20	80	124.0	200	20	96	124.0	200
BCV0300L/ABX	6GE-34Y	84.6	490.0	2	7	112.8	175	20	80	132.8	200	20	96	132.8	200
BCV0400L/ABX	6FE-44Y	97.4	700.0	3	10.5	132.3	225	20	80	152.3	225	20	96	152.3	225

Model	Compressor	Compressor		Condenser		Air Defrost		Remote Loads: One Contactor							
								Low Amps "1L"				High Amps "1H"			
		RLA	LRA	No. Fans	FLA (Total)	MCA	MOPD	Evap. Fan Amps	Defrost Htrs. Amps	Electric Defrost MCA	Electric Defrost MOPD	Evap. Fan Amps	Defrost Htrs. Amps	Electric Defrost MCA	Electric Defrost MOPD
BCV0130L/ABX	4JE-15Y	50.0	352.0	2	7	69.5	110	15	40	84.5	125	15	48	84.5	125
BCV0150L/ABX	4HE-18Y	54.1	352.0	2	7	74.6	125	15	40	89.6	125	15	48	89.6	125
BCV0200L/ABX	4GE-23Y	57.7	352.0	2	7	79.1	125	15	40	94.1	150	15	48	94.1	150
BCV0220L/ABX	6JE-25Y	71.0	490.0	2	7	95.8	150	15	40	110.8	175	15	48	110.8	175
BCV0250L/ABX	6HE-28Y	77.6	490.0	2	7	104.0	175	-	-	-	-	-	-	-	-
BCV0300L/ABX	6GE-34Y	84.6	490.0	2	7	112.8	175	-	-	-	-	-	-	-	-
BCV0400L/ABX	6FE-44Y	97.4	700.0	3	10.5	132.3	225	-	-	-	-	-	-	-	-

Notes:
/ C=208-230/3/60
MCA = Minimum Circuit Ampacity
MOP = Maximum Overcurrent Protection
intelliGen™ and Air Defrost Units do not carry any of the evaporator fan or heater loads.
Power is supplied directly to the evaporators and does not go through the condensing unit.
An evaporator heater hold out relay (option) is recommended when two or more evaporators are connected to a single (BCV) condensing unit to allow termination on coils that have already defrosted to prevent unnecessary steaming. This option is not needed on A0400 intelliGen™ systems wired for a Master / Slave operation.

Mounted Electric Defrost Kits for BCV condensing units include:
Defrost timer, terminal strip, (1) evaporator fan contactor and:
One (1) defrost heater contactor for 1L and 1H codes
Two (2) defrost heater contactors for 2L and 2H codes
Four (4) defrost heater contactors for 4L and 4H codes
Power is supplied to each intelliGen™ evaporator. volt electrical specification.
Each coil terminates its own defrost. Refrigeration will not start until all coils have terminated defrost.
Contact factory for 575 volt electrical specification

A1 ELECTRICAL DATA

Low Temperature Models - Bitzer/460V

Please consult AWEF table on page 109 to confirm DOE compliance per model

Model	Compressor	Compressor		Condenser		Air Defrost		Remote Loads: Four Contactors							
								Low Amps "4L"				High Amps "4H"			
		RLA	LRA	No. Fans	FLA (Total)	MCA	MOPD	Evap. Fan Amps	Defrost Htrs. Amps	Electric Defrost MCA	Electric Defrost MOPD	Evap. Fan Amps	Defrost Htrs. Amps	Electric Defrost MCA	Electric Defrost MOPD
BCV0130L/ABX	4JE-15Y	25.0	176.0	2	3.4	34.7	50	-	-	-	-	-	-	-	-
BCV0150L/ABX	4HE-18Y	27.1	176.0	2	3.4	37.2	60	15	48	60.0	70	15	48	60.0	70
BCV0200L/ABX	4GE-23Y	28.8	176.0	2	3.4	39.5	60	15	48	60.0	80	15	48	60.0	80
BCV0220L/ABX	6JE-25Y	35.5	245.0	2	3.4	47.8	80	15	48	62.8	90	15	48	62.8	90
BCV0250L/ABX	6HE-28Y	38.8	245.0	2	3.4	51.9	90	15	48	66.9	100	15	64	80.0	100
BCV0300L/ABX	6GE-34Y	42.3	245.0	2	3.4	56.3	90	20	64	80.0	110	20	91	113.8	125
BCV0400L/ABX	6FE-44Y	48.7	350.0	3	5.1	66.0	110	20	64	86.0	125	20	91	113.8	125

Model	Compressor	Compressor		Condenser		Air Defrost		Remote Loads: Three Contactors							
								Low Amps "3L"				High Amps "3H"			
		RLA	LRA	No. Fans	FLA (Total)	MCA	MOPD	Evap. Fan Amps	Defrost Htrs. Amps	Electric Defrost MCA	Electric Defrost MOPD	Evap. Fan Amps	Defrost Htrs. Amps	Electric Defrost MCA	Electric Defrost MOPD
BCV0130L/ABX	4JE-15Y	25.0	176.0	2	3.4	34.7	50	15	22	49.7	70	20	22	54.7	70
BCV0150L/ABX	4HE-18Y	27.1	176.0	2	3.4	37.2	60	15	32	52.2	70	15	48	60.0	70
BCV0200L/ABX	4GE-23Y	28.8	176.0	2	3.4	39.5	60	15	48	60.0	80	15	48	60.0	80
BCV0220L/ABX	6JE-25Y	35.5	245.0	2	3.4	47.8	80	15	48	62.8	90	15	48	62.8	90
BCV0250L/ABX	6HE-28Y	38.8	245.0	2	3.4	51.9	90	15	48	66.9	100	15	64	80.0	100
BCV0300L/ABX	6GE-34Y	42.3	245.0	2	3.4	56.3	90	15	64	80.0	110	22	64	80.0	110
BCV0400L/ABX	6FE-44Y	48.7	350.0	3	5.1	66.0	110	15	64	81.0	125	22	64	88.0	125

Notes:

Λ D = 460/3/60
MCA = Minimum Circuit Ampacity
MOP = Maximum Overcurrent Protection

intelliGen™ and Air Defrost Units do not carry any of the evaporator fan or heater loads.
Power is supplied directly to the evaporators and does not go through the condensing unit.
An evaporator heater hold out relay (option) is recommended when two or more evaporators are connected to a single (ACV) condensing unit to allow termination on coils that have already defrosted to prevent unnecessary steaming. This option is not needed on intelliGen™ systems wired for a Master / Slave operation.

Mounted Electric Defrost Kits for BLV condensing units include:
Defrost timer, spring terminal, (1) evaporator fan contactor and:
One (1) defrost heater contactor for 1L and 1H codes
Two (2) defrost heater contactors for 2L and 2H codes
Four (4) defrost heater contactors for 4L and 4H codes
Power is supplied to each intelliGen™ evaporator. volt electrical specification.
Each coil terminates its own defrost. Refrigeration will not start until all coils have terminated defrost.
Contact factory for 575 volt electrical specification

A1 ELECTRICAL DATA

Low Temperature Models - Bitzer/460V

Please consult AWEF table on page 109 to confirm DOE compliance per model

Model	Compressor	Compressor		Condenser		Air Defrost		Remote Loads: Two Contactors							
								Low Amps "2L"				High Amps "2H"			
		RLA	LRA	No. Fans	FLA (Total)	MCA	MOPD	Evap. Fan Amps	Defrost Htrs. Amps	Electric Defrost MCA	Electric Defrost MOPD	Evap. Fan Amps	Defrost Htrs. Amps	Electric Defrost MCA	Electric Defrost MOPD
BCV0130L\ABX	4JE-15Y	25.0	176.0	2	3.4	34.7	50	10	19	44.7	60	15	38	49.7	70
BCV0150L\ABX	4HE-18Y	27.1	176.0	2	3.4	37.2	60	15	32	52.2	70	15	48	60.0	70
BCV0200L\ABX	4GE-23Y	28.8	176.0	2	3.4	39.5	60	15	48	60.0	80	15	64	80.0	80
BCV0220L\ABX	6JE-25Y	35.5	245.0	2	3.4	47.8	80	15	48	62.8	90	15	64	80.0	90
BCV0250L\ABX	6HE-28Y	38.8	245.0	2	3.4	51.9	90	15	48	66.9	100	15	64	80.0	100
BCV0300L\ABX	6GE-34Y	42.3	245.0	2	3.4	56.3	90	15	48	71.3	110	15	80	100.0	110
BCV0400L\ABX	6FE-44Y	48.7	350.0	3	5.1	66.0	110	15	48	81.0	125	15	80	100.0	125

Model	Compressor	Compressor		Condenser		Air Defrost		Remote Loads: One Contactor							
								Low Amps "1L"				High Amps "1H"			
		RLA	LRA	No. Fans	FLA (Total)	MCA	MOPD	Evap. Fan Amps	Defrost Htrs. Amps	Electric Defrost MCA	Electric Defrost MOPD	Evap. Fan Amps	Defrost Htrs. Amps	Electric Defrost MCA	Electric Defrost MOPD
BCV0130L\ABX	4JE-15Y	25.0	176.0	2	3.4	34.7	50	10	19	44.7	60	10	24	44.7	60
BCV0150L\ABX	4HE-18Y	27.1	176.0	2	3.4	37.2	60	15	24	52.2	70	15	40	52.2	70
BCV0200L\ABX	4GE-23Y	28.8	176.0	2	3.4	39.5	60	15	40	54.5	80	15	48	60.0	80
BCV0220L\ABX	6JE-25Y	35.5	245.0	2	3.4	47.8	80	15	40	62.8	90	15	48	62.8	90
BCV0250L\ABX	6HE-28Y	38.8	245.0	2	3.4	51.9	90	15	40	66.9	100	15	48	66.9	100
BCV0300L\ABX	6GE-34Y	42.3	245.0	2	3.4	56.3	90	15	40	71.3	110	15	48	71.3	110
BCV0400L\ABX	6FE-44Y	48.7	350.0	3	5.1	66.0	110	15	40	81.0	125	15	48	81.0	125

Notes:
\ D = 460/3/60
MCA = Minimum Circuit Ampacity
MOP = Maximum Overcurrent Protection

intelliGen™ and Air Defrost Units do not carry any of the evaporator fan or heater loads.
Power is supplied directly to the evaporators and does not go through the condensing unit.
An evaporator heater hold out relay (option) is recommended when two or more evaporators are connected to a single (ACV) condensing unit to allow termination on coils that have already defrosted to prevent unnecessary steaming. This option is not needed on intelliGen™ systems wired for a Master / Slave operation.

Mounted Electric Defrost Kits for BLV condensing units include:
Defrost timer, spring terminal, (1) evaporator fan contactor and:
One (1) defrost heater contactor for 1L and 1H codes
Two (2) defrost heater contactors for 2L and 2H codes
Four (4) defrost heater contactors for 4L and 4H codes
Power is supplied to each intelliGen™ evaporator. volt electrical specification.
Each coil terminates its own defrost. Refrigeration will not start until all coils have terminated defrost.
Contact factory for 575 volt electrical specification

AWEF DATA – MEDIUM TEMPERATURE

Medium Temperature Models - Bitzer Semi-Hermetic Compressors

If model has a numerical value in the table below, the following statement applies:
This refrigeration system is designed and certified for use in walk-in freezer applications

Model	A2L			A1					
	R-454A	R-454C	R-455A	R-404A/R-507A	R-448A	R-449A	R-407A	R-407C	R-407F
BCV0150M^AB±	X	7.6	7.6	7.6	7.6	7.6	7.6	7.6	7.6
BCV0200M^AB±	X	7.6	7.6	7.6	7.6	7.6	7.6	7.6	7.6
BCV0220M^AB±	X	7.6	7.6	7.6	7.6	7.6	7.6	7.6	7.6
BCV0250M^AB±	X	7.6	7.6	7.6	7.6	7.6	7.6	7.6	7.6
BCV0300M^AB±	X	7.6	7.6	7.6	7.6	7.6	7.6	7.6	7.6
BCV0330M^AB±	X	7.6	7.6	7.6	7.6	7.6	7.6	7.6	7.6
BCV0350M^AB±	X	7.6	7.6	7.6	7.6	7.6	7.6	7.6	7.6
BCV0400M^AB±	X	7.6	7.6	7.6	7.6	7.6	7.6	7.6	7.6
BCV0500M^AB±	X	7.6	7.6	7.6	7.6	7.6	7.6	7.6	7.6

Notes:
^ C = 208-230/3/60, D = 460/3/60
± V = A2L/A1 Semi-Hermetic Compressor, X = A1 Semi-Hermetic Compressor
X = model not suitable for this refrigerant
— = model is not DOE AWEF compliant

AWEF DATA – LOW TEMPERATURE

Low Temperature Models - Bitzer Semi-Hermetic Compressors

If model has a numerical value in the table below, the following statement applies:
This refrigeration system is designed and certified for use in walk-in freezer applications

Model	A2L			A1					
	R-454A	R-454C	R-455A	R-404A/R-507A	R-448A	R-449A	R-407A	R-407C	R-407F
BCV0130L^AB±	X	3.15	3.15	3.15	3.15	3.15	3.15	X	3.15
BCV0150L^AB±	X	3.15	3.15	3.15	3.15	3.15	3.15	X	3.15
BCV0200L^AB±	X	3.15	3.15	3.15	3.15	3.15	3.15	X	3.15
BCV0220L^AB±	X	3.15	3.15	3.15	3.15	3.15	3.15	X	3.15
BCV0250L^AB±	X	3.15	3.15	–	3.15	3.15	3.15	X	3.15
BCV0300L^AB±	X	–	–	–	–	–	–	X	3.15
BCV0400L^AB±	X	–	–	–	–	–	–	X	–

Notes:
^ C = 208-230/3/60, D = 460/3/60
± V = A2L/A1 Semi-Hermetic Compressor, X = A1 Semi-Hermetic Compressor
X = model not suitable for this refrigerant
— = model is not DOE AWEF compliant

DIMENSIONAL DRAWINGS

END VIEW

REFERENCE DIMENSIONS SHOWN

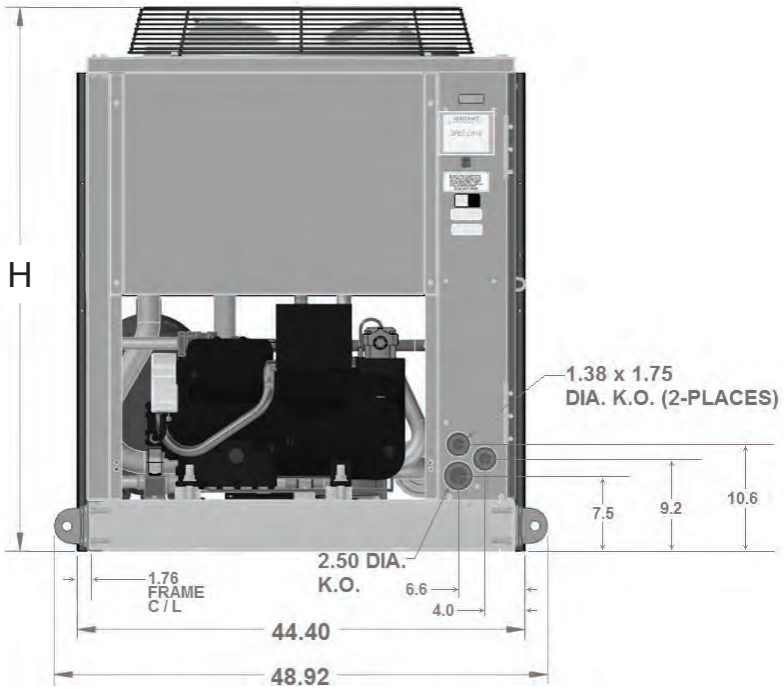

SIDE VIEW

REFERENCE DIMENSIONS SHOWN

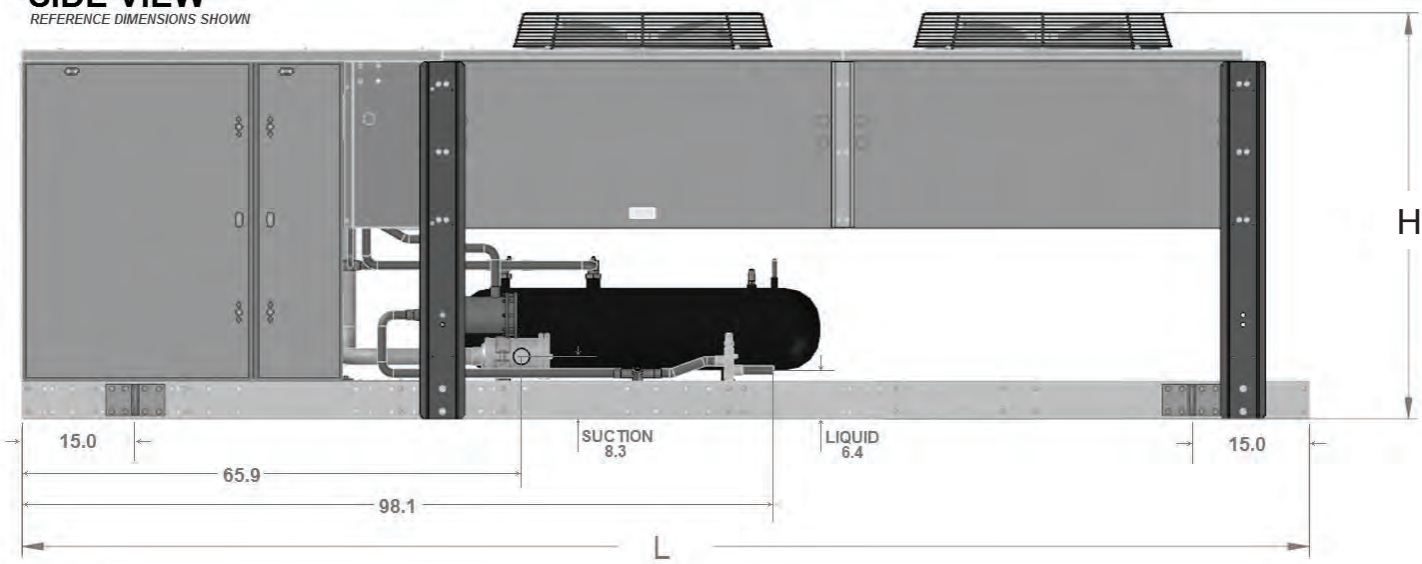

Notes:
Unit length L and height H can be found in unit specification tables.

NOTES

2175 West Park Place Blvd.
Stone Mountain, GA 30087
Phone: 800.537.7775 · Fax: 770.465.5900
heatcraftrpd.com

Since product improvement is a continuing effort, we reserve the right to make changes in specifications without notice.

BN-VCU-0225 | Version 008

©2025 Heatcraft Refrigeration Products LLC